CamX Elara
CamX Spectra

EN
US

Installation and Operating Instructions

AIR TECHNIQUES equipped for life®

J2001

2108100003L29

1602V006

Contents

Important information

1 Concerning this documentation 2
1.1 Warnings and Symbols 2
1.2 Copyright and property rights information 3

2 Safety 3
2.1 Indication for use / Intended use 3
2.2 Contraindication 3
2.3 General safety notes 4
2.4 Connecting appliances securely 4
2.5 Qualified personnel 4
2.6 Protection against electric shock . . . 4
2.7 Only use original parts 5
2.8 Transport 5
2.9 Disposal 5

Product description

3 Overview 6
3.1 Scope of delivery 6
3.2 Accessories 6
3.3 Disposable materials 6

4 Technical data 7
4.1 CamX Elara 7
4.2 CamX Spectra. 8
4.3 Ambient conditions 9
4.4 Model identification plate 10
4.5 Evaluation of conformity 10

5 Function 10
5.1 CamX Elara 11
5.2 CamX Spectra. 11
5.3 Disposable protective cover 12
5.4 Spacer 12
5.5 Handpiece holder 12
5.6 Connection to computer 12

Installation

6 Installation 13
6.1 Assembling the handpiece holder . . 13

7 Initial start-up 13
7.1 Connecting the device to a computer 13
7.2 Installing the unit 14
7.3 Configuring the unit in DBSWIN 14
7.4 Configuring the device in VistaConfig for VistaEasy 15
7.5 Acceptance tests 15

Use

8 Handling 16
8.1 Switching on the appliance 16
8.2 Using the disposable protective cover 16
8.3 Taking an image using CamX Elara 17
8.4 Taking an image using CamX Spectra. 17
8.5 Switching off the camera 19

9 Disinfection and cleaning 20
9.1 Clean and disinfect the handpiece . . 20
9.2 Cleaning the camera lens 20
9.3 Preparing the spacer 20

10 Maintenance 21

Troubleshooting

11 Tips for operators and service technicians 22

Appendix

12 Information concerning EMC in accordance with IEC 60601-1-2 23
12.1 General information 23
12.2 Abbreviations 23
12.3 Guidelines and manufacturer declaration 24
12.4 Calculation table 29

EN
US

EN
US

1 Concerning this documentation

These Installation and Operating Instructions form an integral part of the unit. They correspond to the particular version of the unit and the technical standards valid at the time when it was first placed on the market.

Air Techniques cannot be held liable and cannot offer guarantees for safe and smooth operation of this unit if notes and instructions contained in these Installation and Operating Instructions are not observed.

1.1 Warnings and Symbols

Warning notes

The warning notes in this document highlight potential dangers to people and equipment.

They are marked with the following warning symbols:

General warning symbol

The warnings are structured as follows:

SIGNAL WORD
Description of type and source of danger
Here you will find the possible consequences of ignoring the warning
› Measures to be taken to avoid the danger.

The signal word differentiates between different levels of danger:

– **DANGER**
  Direct danger of severe injury or death
– **WARNING**
  Possible danger of severe injury or death
– **CAUTION**
  Risk of minor injuries
– **NOTICE**
  Risk of extensive material/property damage

Further symbols

These symbols are used within the documentation and on the appliance itself:

Notes, e.g. special instructions concerning economic use of the appliance.

Wear protective gloves.

CE mark

Applied part Type B

Observe the accompanying documentation.

Dispose of properly in accordance with EU Directive 2012/19/EU (WEEE).

Only use once.

250 °F Sterilize at 250 °F

Rx Only US-FDA Regulated Medical Device

SN Serial number

REF Part number

1.2 Copyright and property rights information

All electronic drawings, processes, names, software, and appliances mentioned here are protected under copyright.

Printing or copying these Installation and Operating Instructions, including excerpts thereof, may only be carried out with the written approval of Air Techniques.

2 Safety

The unit has been developed and designed in such a way that dangers are effectively ruled out if used in accordance with the intended use. However, some hazards may remain. Please therefore observe the following notes.

2.1 Indication for use / Intended use

CamX Elara

The CamX Elara intraoral camera is inserted in or near to the oral cavity of the patient. The images support diagnosis, patient information and are used for instruction.

The device is designed for use in healthcare facilities.

CamX Spectra

The CamX Spectra is intended to be used as an aid in the detection and diagnosis of dental caries.

The device is designed for use in healthcare facilities.

2.2 Contraindication

WARNING
Risk of explosion due to inflammation of combustible materials

› Do not use the appliance in rooms in which combustible mixtures may be present, e.g. in operating rooms.

CAUTION
The light from the camera is very bright

› Do not shine the light directly into the eye.

Any use of this appliance/these appliances above and beyond that described in the Installation and Operating Instructions is deemed to be incorrect usage. The manufacturer cannot be held liable for any damage resulting from incorrect usage. The operator will be held liable and bears all risks.

EN
US

2.3 General safety notes

US Federal law restricts this device to sale by or on the order of a dentist or licensed practitioner. This device should be used only under the continued supervision of a dentist or licensed practitioner.

Rx Only US-FDA Regulated Medical Device

- When operating the appliance, be sure to observe all local guidelines, laws, rules and regulations.
- Before each use check the function and condition of the appliance.
- Do not convert or change the appliance in any way.
- Observe the Installation and Operating Instructions precisely.
- Keep the Installation and Operating Instructions in an accessible place so that the operator has instant access to them.

2.4 Connecting appliances securely

Danger can arise when connecting appliances to each other or to parts of systems (e.g. through leakage currents).

- Only connect appliances together when there can be no danger to the operator or to the patient.
- Only connect units when it is safe to do so and there is no risk of damage or harm to the surroundings.
- Observe the relevant specifications of IEC 60601-1 (EN 60601-1) when connecting the appliance to other appliances,e.g. to a PC system, both inside as well as outside the vicinity of the patients.
- Only connect peripheral units (e. g. computer, monitor, printer) which conform to IEC 60950-1 (EN 60950-1) as a minimum standard.

2.5 Qualified personnel

Handling

Persons that operate the appliance are dentists and dental personnel.

As a result of their clinical training, they must ensure safe and appropriate handling.

- Each operator using the appliance must be trained in its handling.

Installation and repair

- All installation, resetting, alteration, expansion, and repair work must be carried out either by Air Techniques personnel or by a suitably qualified person approved by Air Techniques.

2.6 Protection against electric shock

- When using the appliance, observe the relevant electrical safety procedures.
- Never touch the patient and open connectors/ contacts of the appliance simultaneously.
- Damaged supply lines and connecting devices must be replaced immediately.

Pay attention to electrical safety and EMC warning for this product

- Observe specific precautionary measures relating to electromagnetic compatibility (EMC) for medicinal products, see "12 Information concerning EMC in accordance with IEC 60601-1-2".
- As a result of electromagnetic radiation or ESD pulses, image artifacts can occur in the images or the device may experience a malfunction. If necessary, restart the device, software or computer.
- The appliance is designed for operation in healthcare facilities (in accordance with IEC 60601-1-2). If the appliance is operated in another environment, observe possible effects on the electromagnetic compatibility.
- Keep a minimum distance of 30 cm between the appliance and mobile radio devices.
- Note that cable lengths and cable extensions have effects on electromagnetic compatibility.

The following accessories can have an effect on electromagnetic compatibility:

USB connection cable for CamX Elara/ Spectra (8.2 ft) J2020

NOTICE
Negative effects on the EMC due to non-authorized accessories

› Only Air Techniques accessories or accessories approved by Air Techniques may be used.
› If other accessories are used, observe any negative consequences to the function of the appliance.

2.7 Only use original parts

› Only Air Techniques accessories and special accessories or those approved by Air Techniques may be used.
› Only use original spare and replacement parts.

Air Techniques accepts no liability for damage resulting from the use of non-approved accessories, special accessories or any parts other than original spare and replacement parts.

2.8 Transport

Only the original packaging ensures optimum protection for the unit during transport.

If necessary, the original packaging for this unit can be ordered from Air Techniques.

Air Techniques cannot be held responsible for any damage resulting from transport in unsuitable packaging, even during the warranty period.

› Only transport the unit in its original packaging.
› Keep all packaging away from children.

2.9 Disposal

Appliance

The unit must be properly disposed of. Within the European Union, the unit must be disposed of in accordance with EU Directive 2012/19/EU (WEEE).

› If you have any questions about the correct disposal of parts, please contact your specialist dental supplier.

EN
US

3 Overview

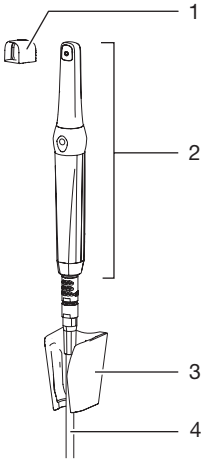

Figure 1: CamX

1 Spacer (CamX Spectra only)
2 Handpiece
3 Handpiece holder
4 USB-connecting cable (to computer)

3.1 Scope of delivery

The following articles are included in the scope of delivery (deviations are possible due to country-specific regulations and import provisions):

CamX Elara J2100
– Handpiece
– Handpiece holder
– USB connection cable (8.2 ft)
– DBSWIN imaging software
– Disposable protective covers (20 pieces)
– Microfiber cloth

CamX Spectra package J2300
– Handpiece
– Handpiece holder
– USB connection cable (8.2 ft)
– DBSWIN imaging software
– Disposable protective covers (20 pieces)
– Spacer (5 pieces)
– Microfiber cloth

3.2 Accessories

The following articles are necessary to operate the appliance (depending on particular application):

	Part no.	As sold
Handpiece holder for CamX	J2040	non sterile
USB connection cable for CamX (8.2 ft)	J2020	non sterile
Spacer, for CamX Spectra only (5 pieces)	J2320	non sterile, to be sterilized by user*

*spacer is reusable, must be sterilized before use (see "9.3 Preparing the spacer").

3.3 Disposable materials

The following materials are used when operating the appliance and must be ordered separately:

Disposable protective covers (500 pieces) J2030
Disposable protective covers (100 pieces) J2025
Disposable protective covers (20 pieces) J2035

4 Technical data

4.1 CamX Elara

Electrical data		
Voltage	V DC	4.75 - 5.25
Signal output		USB 2.0
Type of protection		IP20
Protection class		Applied part Type B
Operating mode*		T1/T2 = 27% 1.5 min / 5.5 min (switch-on/-off time)
Medical device (IEC 60601-1)		Class I
Medical device (FDA)		Class I

* At an ambient temperature of max. 132 °F and while observing the switch-on/off time, the handpiece reaches a maximum surface temperature of 140 °F.

Electromagnetic compatibility (EMC)* Interference emission measurements	
HF emissions in accordance with CIS-PR 11	Group 1 Class B
Harmonic oscillations in accordance with IEC 61000-3-2	Not applicable
Voltage fluctuations/flicker in accordance with IEC 61000-3-3	Not applicable

Electromagnetic compatibility (EMC)* Interference immunity tests	
Discharge of static electricity in accordance with IEC 61000-4-2	Fulfilled
Magnetic field for a supply frequency (50/60 Hz) in accordance with IEC 61000-4-8	Fulfilled
Emitted HF disturbance variables in accordance with IEC 61000-4-3	Fulfilled

*See also "12 Information concerning EMC in accordance with IEC 60601-1-2"

Camera electronics	
Image sensor	1/4" Color Interline Transfer CCD
Number of pixel sensor	470000
Effective image resolution on PC display	704 x 576
Brightness control	Automatic
White balance	permanently set

Optical element		
Illumination		8 LEDs, white light
Sharpness level	mm	12
Focal range	mm	5 - 40
Opening angle		68°

EN
US

EN
US

Dimensions and weights		
Length	in	7.48
Diameter	in	1.02
Weight with cable	oz	6
Weight without cable	oz	1.7
Cable length	ft	8.2

4.2 CamX Spectra

Electrical data		
Voltage	V DC	4.75 - 5.25
Signal output		USB 2.0
Type of protection		IP20
Protection class		Applied part Type B
Operating mode*		T1/T2 = 27% 1.5 min / 5.5 min (switch-on/-off time)
Medical device (IEC 60601-1)		Class I
Medical device (FDA)		Class II

* At an ambient temperature of max. 132 °F and while observing the switch-on/off time, the handpiece reaches a maximum surface temperature of 140 °F.

Electromagnetic compatibility (EMC)* Interference immunity tests	
Discharge of static electricity in accordance with IEC 61000-4-2	Fulfilled
Magnetic field for a supply frequency (50/60 Hz) in accordance with IEC 61000-4-8	Fulfilled
Emitted HF disturbance variables in accordance with IEC 61000-4-3	Fulfilled

*See also "12 Information concerning EMC in accordance with IEC 60601-1-2"

Camera electronics	
Image sensor	1/4" Color Interline Transfer CCD
Number of pixel sensor	470000
Effective image resolution on PC display	704 x 576
Brightness control	Automatic
White balance	permanently set

Optical element		
Illumination		4 LEDs
Sharpness level	nm	405
Focal length	mm	8
Opening angle		68°

Dimensions and weights		
Length	in	7.48
Diameter	in	1.02
Weight with cable	oz	6
Weight without cable	oz	1.7
Cable length	ft	8.2

4.3 Ambient conditions

Ambient conditions during operation		
Temperature	°F	50 to 104
Rel. humidity	%	20 to max. 75
Air pressure	inHg	22.15 - 31.30

Ambient conditions for storage and transport		
Temperature	°F	32 to 170
Rel. humidity	%	max. 75, non-condensing
Air pressure	inHg	20.67 - 31.30

EN
US

4.4 Model identification plate

The model identification plate is on the handpiece.

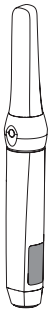

4.5 Evaluation of conformity

This equipment has undergone a test of conformity as prescribed under the relevant European Union directive. This equipment conforms to all requirements.

5 Function

CamX Elara and Spectra are intraoral cameras. The function of the camera is recognizable from the symbol on the rear.

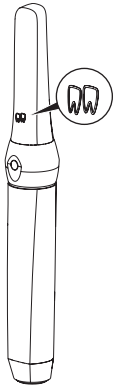

	Elara	Intraoral images
	Spectra	Caries detection aid

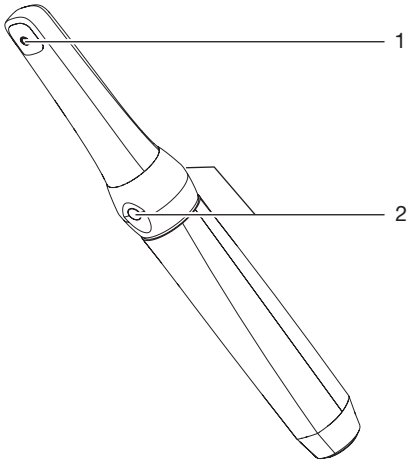

1 Camera lens
2 Capture buttons

If you click on capture button, the camera changes between moving image and stationary image. The pressure point of the capture button is tangible. When changing the mode, the camera vibrates slightly. Optionally, the camera can also be operated by a foot switch.

The image sensor in the handpiece digitizes the image. The camera transmits the image to a computer via the USB connection cable.

The camera lens focusing range is fixed.

The power supply for the camera to the computer is realized via the USB connection cable.

The camera switches off automatically if it is not moved for two minutes. As soon as the camera is moved, it switches on again.

5.1 CamX Elara

The camera has a fixed-focus optical lens with a depth of field appropriate for intraoral imaging. Eight LEDs are arranged around the optical lens which provide even illumination.

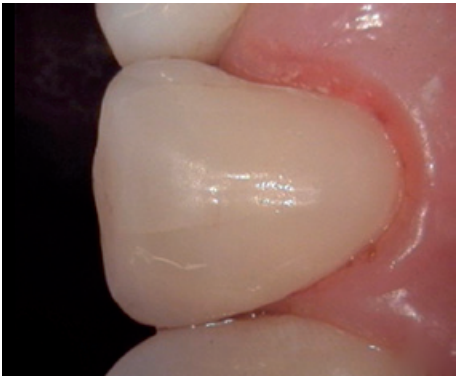

Figure 2: CamX Elara

5.2 CamX Spectra

The camera is used to create intraoral images for detecting caries, plaque and tartar. It has a fixed-focus optical lens for intraoral imaging.

Positioned around the optical element are four LEDs with blue-violet light (wavelength 405 nm). The energy rich blue-violet light causes the tooth structure (tooth enamel, dentine) and the metabolites of cariogenic bacteria (porphyrins) to fluoresce. The substances emit different colors (intrinsic biofluorescence). This makes it possible to analyze caries activity and detect potential tooth disease.

Color of intrinsic biofluorescence	Substance
Green	Tooth structure (tooth enamel, dentine)
Red	Metabolites of cariogenic bacteria (porphyrins)

Application areas of the CamX Spectra:

- Detecting plaque and tartar
- Detecting the early stages of caries
  - Fissure caries that are difficult to detect
  - Location of carious lesions on smooth surfaces
  - Optically-supported check during excavation

Analysis

The images are analyzed by the imaging software DBSWIN with the help of a filter.

The **prophylaxis view** shows the original image.

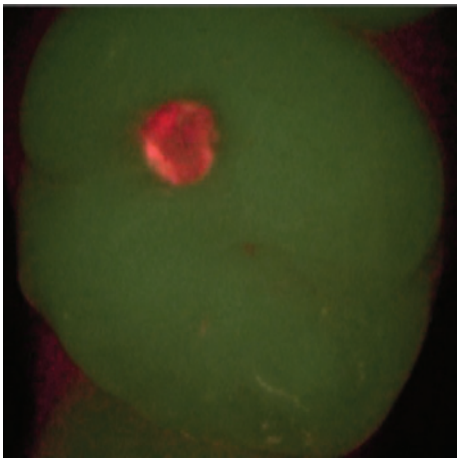

Figure 3: Prophylaxis view

The **caries view** analyses the intrinsic biofluorescence of the substances with the caries filter.

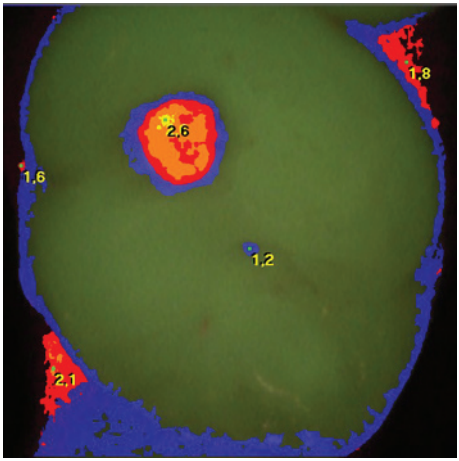

Figure 4: Caries view

EN
US

The color scale provides information on carious lesions:

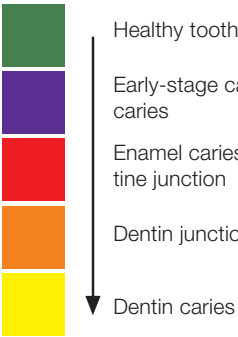

Use gold standard techniques to examine for potential caries.

5.3 Disposable protective cover

Disposable protective covers provide an effective barrier preventing any hazard to the patient. Do not use the device without fitting a disposable protective cover ("8.2 Using the disposable protective cover").

5.4 Spacer

The spacer enables optimum analysis of images. The position and the distance of the image are reproducible. In addition,the spacer screens off the image area and minimizes the penetration of external light. ("8.4 Taking an image using CamX Spectra")

Spacers are reusable, must be sterilized before use (see "9.3 Preparing the spacer").

5.5 Handpiece holder

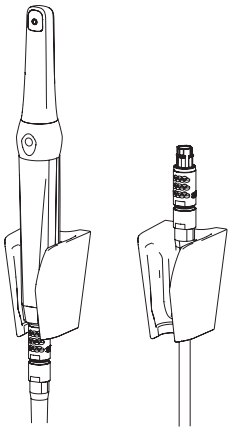

Whenever the camera is in the handpiece holder, it is switched off. When you remove the camera from the handpiece holder, it switches on automatically.

If the camera is used at a different treatment center, it is also possible to only hang the connection cable in the handpiece holder.

5.6 Connection to computer

Connect the camera directly to the USB port on the computer. The camera requires the DBSWIN software or approved third party dental imaging softwares via TWAIN interface.

6 Installation

6.1 Assembling the handpiece holder

The handpiece holder can be attached using the adhesive or screws.

› Use suitable mounting materials.

› Mount the handpiece holder near to where the handpiece will be used.

The length of the USB cable is 8.2 ft.

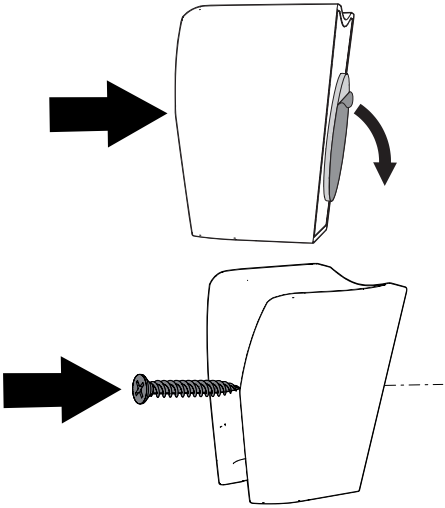

7 Initial start-up

NOTICE
Short circuit due to build up of condensation

› Do not put the appliance into operation until it has warmed up to room temperature and it is dry.

The unit supports the following imaging programs:

– DBSWIN
– VistaEasy
– ImageBridge
– Third party dental imaging softwares on request

7.1 Connecting the device to a computer

The unit has no main power switch. Therefore, it is important that the USB connection on the PC and, if necessary,the socket-outlet for the power supply are easily accessible and that the appliance can be unplugged if necessary.

Where a Tower or Desktop-PC is being used then always use one of the USB connections at the back of the PC. Do not connect the unit to a front USB connection.

› Wait for the instruction of the installation wizard before you connect the unit to the PC for the first time (see "7.2 Installing the unit").

EN
US

7.2 Installing the unit

› Close all programs.
› Insert the supplied DBSWIN DVD into the DVD drive.

The start screen appears.

› If the DVD does not start to play automatically, execute the file *CD_Start.exe*.
› Select the required language.
› Open the *Driver* tab.

› Click *Driver Installation*.
› Confirm the message with *OK*.

The *Driver Setup* wizard opens.

› Follow the instructions of the installation wizard.

7.3 Configuring the unit in DBSWIN

› Start DBSWIN.
› In the menu select *Options* > *Show Configuration*.

The *Configuration* tab opens.

› Click on the *Modules* button.
› Double click on *Video*.

The *Video Properties* window opens.

› Choose the tab *Video source 1*.
› In *Control method* select the camera *CamX Elara* or *CamX Spectra*.

The following settings can be made:

Video source

WDM driver	The WDM driver is selected automatically.
Noise reduction	If noise reduction is activated, the set number of images are recorded for each recording. A new image is calculated from these images where interferences are compensated to the greatest possible extent.
Capture ring Function	Time when the image is created if a capture button is pressed: – Trigger function on release (default) – Trigger function on press

Settings

Image export	Each image is automatically copied into a defined path. The path, file format and other settings are set in the *Light Table* module.

7.4 Configuring the device in VistaConfig for VistaEasy

› Start VistaConfig via *Start* > *All Programs* > *Air Techniques* > *VistaEasy* > *VistaConfig*.

The camera is detected and activated automatically.

The *Settings* tab opens. The following settings can be made:

Display

Resolution	The resolution of the camera image can be selected
Interlaced	Full screen view (default)

WDM driver

Driver	The WDM driver is selected automatically.

Pressure sensitive release

Function	The function of the capture buttons can be selected. *Record* + *Pause* is default.
Trigger event	Time when the image is created if the capture button is pressed: – By pressing – By releasing (default)

› To change the configuration, click on .

› To save the configuration, click on .

7.5 Acceptance tests

Electrical safety check

› Carry out an electrical safety check according to all national regulations.

› Document the results.

The handpiece is applied part in accordance with IEC 60601-1.

EN
US

8 Handling

NOTICE
Damage to the camera by dropping or scratching

› Always store the camera in the handpiece holder.
› Do not place the camera on a storage surface.
› Do not place the camera between other instruments.

8.1 Switching on the appliance

› Connect the camera to a USB port of the computer using the connection cable.
› To start the imaging program, see software manual.

8.2 Using the disposable protective cover

WARNING
There is a danger of cross-contamination when disposable protective covers are not used or are used more than once

› Do not use the appliance without fitting a disposable protective cover.

Do not use the disposable protective cover more than once (disposable item).

When fitting the disposable protective cover, wear protective gloves.

› Hold the camera so that the optical element is facing down.
› Lift the white edge of the disposable protective cover and slide the camera head into the cover. The transparent plastic side must face upwards.

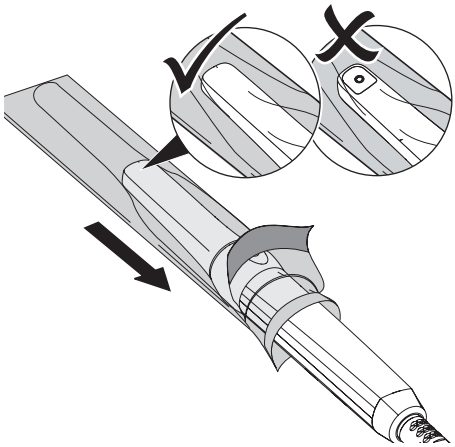

› Stretch the disposable protective cover an extra 2-3 mm so that the cover presses tightly against the optical element.
› Carefully press the disposable protective cover against the window of the optical element itself with your fingertips. Make sure there are no air bubbles between the window of the optical element itself and the disposable protective cover.
› Hold the disposable protective cover firmly at the white edge and pull off the transparent plastic side in the direction of the camera head.

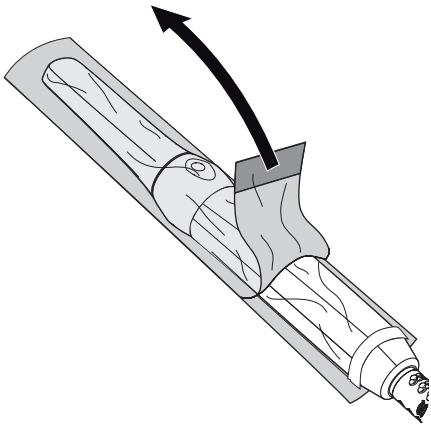

› Pull off the paper underside from the camera head in the direction of the handpiece.

8.3 Taking an image using CamX Elara

Taking a picture

CAUTION
The blue-violet LED light

› Do not peer into the light source.
› Do not use or point the camera directly on the eyes.

When you remove the camera from the handpiece holder, the camera shows a moving image (Live mode). Each time the mode is switched between Live mode and Freeze mode, the handpiece vibrates slightly.

› Start imaging program.
› Remove the camera from the handpiece holder.
› Select the desired image section in Live mode.
› Press on one of the capture buttons.

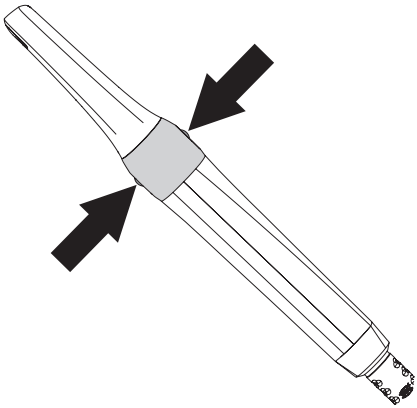

The camera switches to "Freeze" mode. The freeze frame will be transmitted to the imaging program, i.e. the monitor.

› Edit the image using the imaging program and save. (For further information, refer to the software instruction.)
› To return to "Live" mode, press on one of the capture buttons again.

8.4 Taking an image using CamX Spectra

Preparation

Depending on the favored analysis, the teeth must be prepared differently.

For prophylaxis view:

› Do **not** carry out professional teeth cleaning.

For caries view:

› Carry out professional teeth cleaning.
› Remove prophy paste using the air-water spray.
› Dry the teeth.

The following factors can affect the fluorescence and hence the analysis:

– Soiling and remains of food
– Tartar, concrement
– Aid for staining plaque
– Prophylaxis/fluoride pastes
– Tooth/polishing pastes

Putting on the sterilized spacer

WARNING
Danger of cross-contamination when used without preparation or following incorrect preparation

› Sterilize the spacer in the steam sterilizer (see "9.3 Preparing the spacer") before each use.

› Hold the handpiece with a protective cover properly installed and insert the handpiece tip into the curved end opening of the spacer.
› Push the handpiece completely in until the tip is fully inserted into the spacer.
› Make sure that the spacer is properly aligned with the illuminated tip of the handpiece.

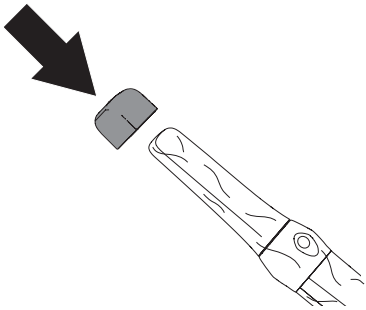

EN
US

Taking a picture

CAUTION
The blue-violet LED light

› Do not peer into the light source.
› Do not use or point the camera directly on the eyes.

When you remove the camera from the handpiece holder, the camera shows a moving image (Live mode). Each time the mode is switched between Live mode and Freeze mode, the handpiece vibrates slightly.

› Start imaging program.
› Remove the camera from the handpiece holder.
› Select the required image section in Live mode.
› Press on one of the capture buttons.

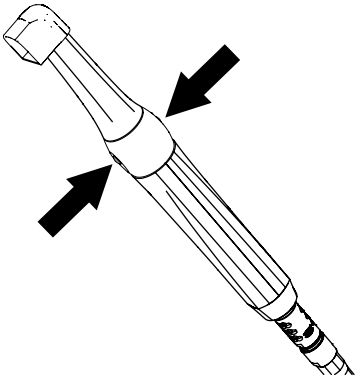

The camera switches to "Freeze" mode. The freeze frame will be transmitted to the imaging program, i.e. the monitor.

› Edit the image using the imaging program and save. (For further information, refer to the software instruction.)
› To return to "Live" mode, press on one of the capture buttons again.

Analysis

As soon as a still image is recorded, it is placed in the imaging program (in the image strips in DBSWIN).

Select view:

Switch to prophylaxis view.

Switch to caries view.

The **prophylaxis view** shows the image without filter.

Red areas indicate potential caries-causing bacteria. The healthy tooth enamel is shown as green areas.

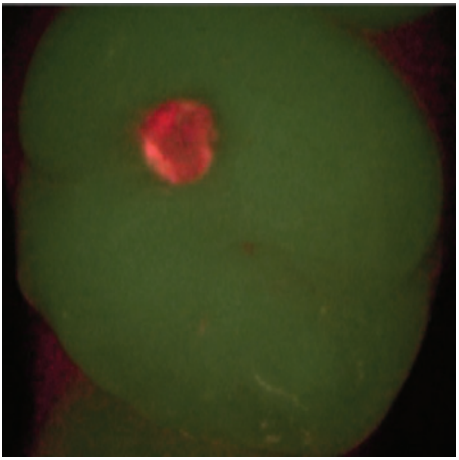

Figure 5: Prophylaxis view

The **caries view** analyzes the image with the caries filter.

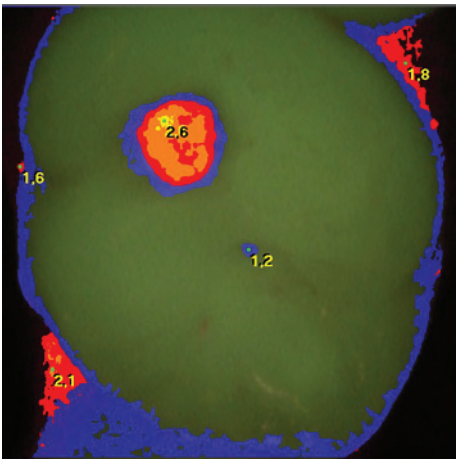

Figure 6: Caries view

The color scale provides information on carious lesions:

Healthy tooth enamel

Early-stage caries, incipient enamel caries

Enamel caries up to enamel/dentine junction

Dentin junction already exceeded

Dentin caries

Use gold standard techniques to examine for potential caries.

8.5 Switching off the camera

› Carefully remove and dispose of the disposable protective cover.

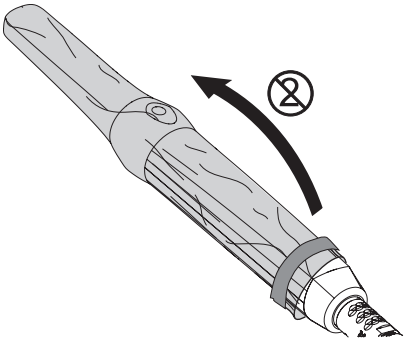

› Disinfecting the camera (see "9.1 Clean and disinfect the handpiece").

› Place the camera in the handpiece holder.

Result:

The camera switches off automatically.

EN
US

9 Disinfection and cleaning

9.1 Clean and disinfect the handpiece

NOTICE
The wrong cleaning and disinfection can damage the camera

› Only clean the surface of the camera.
› Do not use any aggressive or abrasive cleaning agents.
› Only use disinfectant wipes to clean the camera.
› Do not clean the camera by submerging in or spraying with disinfectant.
› Do not put the camera in an autoclave.

The disposable protective cover must be used for only one patient and disposed of properly in accordance with locale code.

Unplug camera components before performing cleaning.

› Wipe the surface of the camera with an EPA registered surface dinsinfectant.

9.2 Cleaning the camera lens

NOTICE
Damage to the optical element caused by incorrect cleaning

Residues of disinfectant will contaminate the optical element.

› Only use the supplied microfiber cloth and alcohol.

› Clean the window of the optic using the microfiber cloth with a drop of alcohol.

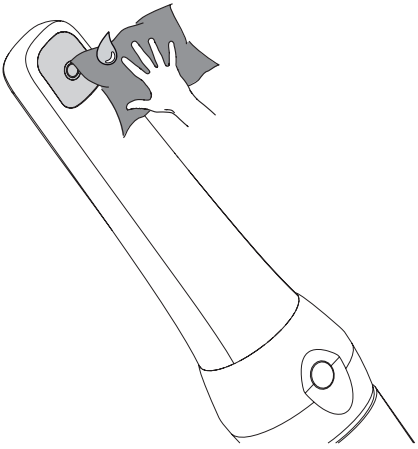

9.3 Preparing the spacer

The following instructions are verified as suitable for preparing the product for further use.

Preparation process:

– Sterilization in steam sterilizer

The person responsible for preparation must ensure that the process and the equipment, materials, and personnel used achieve the required results. If there is any deviation from the validated preparation process, the person responsible for the preparation is responsible for the effectiveness of the process and for any adverse consequences.

› Carry out validations and routine monitoring of the preparation process.
› Observe any national and local regulations that apply to the cleaning, disinfection, sterilization and storage.

Steam sterilization

WARNING
Incorrect sterilization inhibits the effectiveness, and can damage the product

› Only use steam sterilization.
› Observe the process parameters.
› Do not use any other process.

Process parameters
Sterilizer type: Gravity
Minimum temperature: 250 °F
Exposure time: 30 min
Dry time: 20 min

Wear protective gloves.

› Steam sterilize the spacer in a gravity steam sterilizer at 250 °F for 30 minutes and dry time of 20 minutes before use.
Use a new replacement spacer as needed.

Storage

› Store the product protected against contamination.
› After sterilization, store the parts in a sterilization packaging cleared by FDA under 21 CFR 880.6850 product code FRG.
› Shelf life is determined and identified per instruction for use of sterilization packaging used.

10 Maintenance

The appliance is maintenance-free.

EN
US

11 Tips for operators and service technicians

Repairs, above and beyond standard maintenance, may only be carried out by a suitably qualified technician or one of our service technicians.

Problem	Probable cause	Solution
Image contains a high amount of red; healthy tooth substance is not properly green	Penetration of external light	› Check the position of the spacer (directly on the tooth). › Turn off or dim source of external light (e.g. operating light); darken the room.
Image is blurred, milky	The disposable protective cover is not positioned correctly on the window of the camera lens itself	› Place the disposable protective cover correctly on the window of the camera lens.
	Window of the camera lens is dirty	› Clean the window of the camera lens (see "9.2 Cleaning the camera lens").
	Handpiece is defective	› Send handpiece for repair.
Image too dark	LEDs defective	› Send handpiece for repair.
No image	USB connection cable is not connected	› Connect the USB connection cable.
	USB connection cable is faulty	› Replace the USB connection cable.
	Computer is not switched on, software has not started	› Switch on the computer and start the software.
	Camera driver is not correctly installed	› Check the driver installation and software settings.
Image is shown distorted	Wrong resolution settings	› Choose an aspect ratio of 4:3 in *VistaConfig > Video properties> Display*

12 Information concerning EMC in accordance with IEC 60601-1-2

12.1 General information

This information contains excerpts from the international standards for electrical, medical appliances. It must be observed during the installation and combination of Air Techniques appliances with products made by other manufacturers. In the event of uncertainties, the complete standard must be consulted.

12.2 Abbreviations

EMC	Electromagnetic compatibility
HF	High frequency
U_T	Rated voltage of the appliance (supply voltage)
V_1, V_2	Compliance level for the test according to IEC 61000-4-6
E_1	Compliance level for the test according to IEC 61000-4-3
P	Rated power of the transmitter in Watts (W) in accordance with the specifications of the transmitter manufacturer
d	Recommended safety distance in meters (m)

EN
US

12.3 Guidelines and manufacturer declaration

Electromagnetic emissions for all appliances and systems

The appliance is designed for operation in an electromagnetic environment as specified below. The customer or operator of the appliance should ensure that the appliance is operated in such environments.

Interference emission measurements	Compliance	Electromagnetic environment - guidelines
HF emissions in accordance with CISPR 11	Group 1	The appliance uses HF energy exclusively for its internal function. Its HF emissions are therefore very low and unlikely to interfere with nearby electronic appliances.
HF emissions in accordance with CISPR 11	Group 2	The appliance must emit electromagnetic energy in order to guarantee its intended function. Nearby electronic appliances may be influenced.
HF emissions in accordance with CISPR 11	Class [A or B]	The appliance is suitable for use in all facilities including those in the living area and areas that are directly connected to the public mains electricity supply that also supplies buildings used for living purposes.
Harmonic oscillations in accordance with IEC 61000-3-2	[Class A, B, C, D or not applicable]	
Voltage fluctuations/flicker in accordance with IEC 61000-3-3	[Complies or not applicable]	

Table 1: Electromagnetic emissions for all appliances and systems

Electromagnetic interference immunity factor for all appliances and systems

The appliance is designed for operation in the electromagnetic environments specified below. The customer or operator of the appliance should ensure that the appliance is operated in such environments.

Interference immunity tests	IEC 60601 – test level	Compliance level	Electromagnetic environment – guidelines
Static electricity discharge (ESD) in accordance with IEC 61000-4-2	±8 kV (contact discharge) ±15 kV (air discharge)	±8 kV (contact discharge) ±15 kV (air discharge)	Floors should be made of wood or cement, or covered with ceramic tiles. If the floor is covered with synthetic material, the relative humidity must be at least 30 %.
Quick transient electric disturbance variables/bursts in accordance with IEC 61000-4-4	±2 kV for mains lines ±1 kV for input and output lines	±2 kV for mains lines ±1 kV for input and output lines	The quality of the supply voltage should correspond to a typical business or hospital environment.
Surges in accordance with IEC 61000-4-5	±1 kV voltage (outer conductor/outer conductor) ±2 kV voltage (outer conductor/earth)	±1 kV (differential mode) ±2 kV (common mode)	The quality of the supply voltage should correspond to a typical business or hospital environment.
Voltage dips, short-term interruptions and fluctuations of the supply voltage in accordance with IEC 61000-4-11	0 % U_T for 1/2 period 0 % U_T for 1 period 70 % U_T for 25/30 periods 0 % U_T for 250/300 periods	< 5 % U_T (> 95 % dip of the U_T) for 1/2 period 40 % U_T (60 % dip of the U_T) for 5 periods 70 % U_T (30 % dip of the U_T) for 25 periods < 5 % U_T (> 95 % dip of the U_T) for 5 s	The quality of the supply voltage should correspond to a typical business or hospital environment. If the operator of the appliance also requires further functions for the occurrence of interruptions of the energy supply, it is recommended to feed the appliance from an interruption-free power supply or a battery.
Magnetic field for a supply frequency (50/60 Hz) in accordance with IEC 61000-4-8	30 A/m	30 A/m	Magnetic fields in the electrical frequency should correspond to the typical values, as can be found in the business and hospital environment.

Table 2: Electromagnetic interference immunity factor for all appliances and systems

EN
US

Electromagnetic interference immunity factor for appliances or systems that are operated in healthcare facilities

Mobile radios should not be used closer to the unit (including the lines) than the recommended safety distance that is calculated according to the formula that applies to the transmission frequency.

Interference immunity tests	IEC 60601 – test level	Compliance level	Recommended safety distance
Conducted HF disturbance variables in accordance with IEC 61000-4-6	3 V_{eff} 150 kHz to 80 MHz	$[V_1]$ V	$d = [3.5 / V_1] \cdot \sqrt{P}$ $d = 1.2 \cdot \sqrt{P}$
Emitted HF disturbance variables in accordance with IEC 61000-4-3	10 V/m 80 MHz to 2.7 GHz	$[E_1]$ V/m	$d = [3.5 / E_1] \cdot \sqrt{P}$ for 80 MHz to 800 MHz $d = 1.2 \cdot \sqrt{P}$ for 80 MHz to 800 MHz $d = [7 / E_1] \cdot \sqrt{P}$ for 800 MHz to 2.7 GHz $d = 2.3 \cdot \sqrt{P}$ for 800 MHz to 2.7 GHz

Table 3: Electromagnetic interference immunity factor for appliances or systems that are operated in healthcare facilities

P Rated power of the transmitter in Watts (W) in accordance with the specifications of the transmitter manufacturer

d Recommended safety distance in meters (m)

The field strength of stationary radio transmitters for all frequencies should be lower than the compliance level[b] in accordance with inspections on-site [a]

Interferences are possible in the vicinity of appliances that have the following symbols.

Note 1: The higher frequency range applies for 80 MHz and 800 MHz.

Note 2: These guidelines may not apply in all cases. The spreading of electromagnetic field sizes is influenced by absorptions and reflections of the building, objects and people.

[a] The field strength of stationary transmitters, such as the base stations of mobile phones and mobile landline wireless devices, amateur radio stations, AM and FM radio and television broadcasters, cannot be predicted theoretically with accuracy. To determine the electromagnetic environment with regard to stationary transmitters, a study of the electromagnetic phenomena of the location should be considered. If the measured field strength at the location where the unit is used exceeds the compliance level mentioned above, the unit should be observed to verify the intended function. If unusual performance characteristics are observed, additional measures may be required, such as a changed alignment or relocation of the unit.

[b] Over the frequency range of 150 kHz to 80 MHz, the field strength should be less than $[V_1]$ V/m.

Test frequency (MHz)	Transmission frequency[a] (MHz)	Service	Modulation[b]	Max. performance (W)	Safety distance (m)	Compliance level (V/m)
385	380-390	TETRA 400	Impulse modulation[b] 18 Hz	1.8	0.3	27
450	430-470	GMRS 460, FRS 460	FM[c] ±5 kHz fluctuation 1 kHz sinus	2	0.3	28
710	704-787	LTE band 13, 17	Impulse modulation[b] 217 Hz	0.2	0.3	9
745						
780						
810	800-960	GSM 800/900, TETRA 800, iDEN 820, CDMA 850, LTE band 5	Impulse modulation[b] 18 Hz	2	0.3	28
870						
930						
1720	1700-1990	GSM 1800, CDMA 1900, GSM 1900, DECT, LTE band 1, 3, 4, 25, UMTS	Impulse modulation[b] 217 Hz	2	0.3	28
1845						
1970						
2450	2400-2570	Bluetooth, WLAN, 802.11 b/g/n, RFID 2450, LTE band 7	Impulse modulation[b] 217 Hz	2	0.3	28
5240	5100-5800	WLAN 802.11a/n	Impulse modulation[b] 217 Hz	0.2	0.3	9

Table 4: Test specifications for the interference immunity factor for appliances to mobile radios

[a] For some services, only the uplink frequencies are contained.

[b] The carrier frequency should be modulated with a square-wave signal with a 50 % duty cycle.

[c] As an alternative to the FM modulation, 50 % pulse modulation with 18 Hz can be used, even though it does not correspond to the actual modulation. This would be the worst case.

EN
US

Recommended safety distances between mobile HF communication appliances and the appliance

The appliance is designed for operation in the electromagnetic environments, in which the HF disturbance variables are checked, specified below. The customer or the operator of the appliance can help to prevent electromagnetic interference by maintaining the minimum distances between mobile HF communication equipment (transmitters) and the appliance, as recommended below according to the maximum output line of the communication equipment.

Keep a minimum distance of 30 cm between the appliance and mobile radio devices.

Rated power of the transmitter (W)	Safety distance depending on the transmission frequency (m)		
	150 kHz to 80 MHz $d = 1.2 \cdot \sqrt{P}$	80 MHz to 800 MHz $d = 1.2 \cdot \sqrt{P}$	800 MHz to 2.5 GHz $d = 2.3 \cdot \sqrt{P}$
0.1	0.38	0.38	0.73
1	1.2	1.2	2.3
10	3.8	3.8	7.3
100	12	12	23

Table 5: Recommended safety distances between mobile HF communication appliances and the appliance

For transmitters whose maximum rated power is not specified in the table shown above, the recommended safety distance d in meters (m) can be determined from the formula that belongs to the respective column, whereby P is the maximum rated power of the transmitter in Watts (W) in accordance with the specification of the transmitter manufacturer.

Note 1: The higher frequency range applies for 80 MHz and 800 MHz.

Note 2: These guidelines may not apply in all cases. The spreading of electromagnetic waves is influenced by absorptions and reflections of the buildings, objects and humans.

12.4 Calculation table

If the measured values deviate from the standard values, the values are specified in chapter "4 Technical data".

The safety distances can then be calculated in the tables shown below.

P: .....

V_1: .....

E_1: .....

P Rated power of the transmitter in Watts (W) in accordance with the specifications of the transmitter manufacturer

V_1 Compliance level for the test according to IEC 61000-4-6

E_1 Compliance level for the test according to IEC 61000-4-3

Interference immunity tests	IEC 60601 – test level	Compliance level	Recommended safety distances
Conducted HF disturbance variables in accordance with IEC 61000-4-6	3 V_{eff} 150 kHz to 80 MHz	[V_1] V	$d = [3.5 / V_1] \cdot \sqrt{P}$
Emitted HF disturbance variables in accordance with IEC 61000-4-3	3 V/m 80 MHz to 2.5 GHz	[E_1] V/m	$d = [3.5 / E_1] \cdot \sqrt{P}$ for 80 MHz to 800 MHz
			$d = [7 / E_1] \cdot \sqrt{P}$ for 800 MHz to 2.5 GHz

Rated power of the transmitter (W)	Safety distance depending on the transmission frequency (m)		
	150 kHz to 80 MHz $d = [3.5 / V_1] \cdot \sqrt{P}$	80 MHz to 800 MHz $d = [3.5 / E_1] \cdot \sqrt{P}$	800 MHz to 2.5 GHz $d = [7 / E_1] \cdot \sqrt{P}$
0.01			
0.1			
1			
10			
100			

For over 50 years, Air Techniques has been a leading innovator and manufacturer of dental products. Our priority is ensuring complete satisfaction by manufacturing reliable products and providing excellent customer and technical support. Whether the need is digital imaging, utility room equipment or merchandise, Air Techniques can provide the solution via our network of authorized professional dealers. Proudly designed, tested and manufactured in the U.S., our products are helping dental professionals take their practices to the next level.

Air Techniques' family of quality products for the dental professional include:

☐ **Digital Imaging**
- Digital Radiography
- Intraoral Camera
- Caries Detection Aid
- Intraoral X-ray
- Film Processors

☐ **Utility Room**
- Dry Vacuums
- Wet Vacuums
- Air Compressors
- Amalgam Separator
- Utility Accessories
- Utility Packages

☐ **Merchandise**
- Evacuation System Cleaner
- Imaging Accessories
- Chemistry
- Processor Accessories

CORPORATE HEADQUARTERS
1295 WALT WHITMAN ROAD | MELVILLE, NEW YORK 11747- 3062 | PHONE: 800-247-8324 | FAX: 888-247-8481

WESTERN FACILITY
291 BONNIE LANE, SUITE 101 | CORONA, CA 92880 - 2804 | PHONE: 800-247-8324 | FAX: 951-898-7646

www.airtechniques.com

Platinum Green Business Certified

ISO 9001 ISO 13485 FDA-GMP COMPLIANT

AIR TECHNIQUES equipped for life®