MOJAVE® LT MONITOR

Dry Vacuum System

Part Nos: LT3M, LT5M, 2LT3M, 2LT5M

User's and Installation Manual

CleanStream is the ONLY vacuum line cleaner Air Techniques recommends for daily use to ensure the highest performance and longevity of your Mojave Monitor.

AIR TECHNIQUES equipped for life®

TABLE OF CONTENTS

Section	Page
Congratulations	3
Intended Use	3
Safety Summary	3
Purpose of this Manual	4
Sizing Guide	4
Specifications	4
Product Description	5
Installation Information	8
Installation	14
Electrical Connections	16
Operating Information	18
Touch Screen Controls	20
Vision Monitor, Remote Monitoring Solution	26
Maintenance	27
Accessories/Options	29
Troubleshooting	30
Warranty	32
On-Line Warranty Registration	32

LIST OF ILLUSTRATIONS

Figure	Title	Page
1	MOJAVE LT Key Parts Identification	5
2	MOJAVE LT, LT3M and LT5M, Functional Connection Points	6
3	MOJAVE LT, 2LT3M and 2LT5M, Functional Connection Points	7
4	Proper Gravity Drain Line Connections	8
5	MOJAVE LT, LT3M, LT5M, 2LT3M, and 2LT5M Vacuum Pump Dimension	9
6	MOJAVE LT System Floor Plan	13
7	MOJAVE LT Plumbing Connection	14
8	MOJAVE LT Detail Plumbing Connection	15
9	MOJAVE LT Power Connection	16
10	Remote Switch Connection to Main Board	16
11	3-Wire and 4-Wire Remote Switch Connection	17
12	MOJAVE LT Front Panel Controls and Indicators	18
13	CleanStream Dispenser Cap Adapter Locations	29

CONGRATULATIONS

Congratulations on the purchase of the **MOJAVE LT** Monitor Dry Vacuum System, which is hereafter referred to as **MOJAVE LT** in this manual. **MOJAVE LT** is available in single and dual pump configurations. Single pump systems include part numbers LT3M and LT5M while the dual pump systems include part numbers 2LT3M and 2LT5M. Each system provides state of the art vacuum technology designed for reliable operation in the modern dental facility. The system uses a 100% water-less and oil less Vacuum Pump to produce the high-volume air flow required for multiple simultaneous users while the Air/Water Separator ensures that no liquids enter the pump.

MOJAVE LT incorporates an efficient energy management system. This is accomplished by adding a Variable Frequency Drive (VFD) to the Vacuum Pump. This system automatically adjusts the frequency of the pump to maintain the required vacuum level depending on the needs of your dental facility. With this balanced system, each user always has the flow rate necessary to do the job while conserving electricity and prolonging the life of your pump.

INTENDED USE

The **MOJAVE LT** creates vacuum that will be used in a dental facility.

SAFETY SUMMARY

Use of the **MOJAVE LT** not in conformance with the instructions specified in this manual may result in permanent failure of the unit.

WARNING: To prevent fire or electrical shock, do not expose this equipment to rain or moisture.
All user serviceable items are described in the maintenance section.

Manufacturing date code on serial number label is in the format Month YYYY.

ATTENTION USERS:

Markings. The following terms or symbols are used on the equipment or in this manual to denote information of special importance:

Alerts users to important Operating and Maintenance instructions. Read carefully to avoid any problems.

Warns users that uninsulated voltage within the unit may be of sufficient magnitude to cause electric shock.

I ON
O OFF Indicates the ON and OFF position for the Equipment power switch.

CLASSIFIED C UL US

MEDICAL ELECTRICAL EQUIPMENT

WITH RESPECT TO ELECTRICAL SHOCK, FIRE, MECHANICAL AND OTHER SPECIFIED HAZARDS ONLY
IN ACCORDANCE WITH UL 60601-1, CAN/CSA C22.2 No. 601.1
66CA

Warns users of hot surfaces. There is a danger of burns. Work near these surfaces only after they have cooled down.

Identifies the name of the manufacturer.

Indicates date of manufacture

Indicates protective Earth Ground for the Equipment power switch.

Air Techniques, Inc.
1295 Walt Whitman Road
Melville, New York, USA 11747- 3062

PURPOSE OF THIS MANUAL

This manual provides installation, operation and maintenance instructions for the support of the **MOJAVE LT** systems, LT3M, LT5M, 2LT3M, and 2LT5M. Each consists of one or two corresponding Dry Vacuum Pumps and Air/Water Separator assemblies housed on a chassis. Review and follow the guidelines included in this manual to ensure that the system provides the highest level of performance.

SIZING GUIDE

To ensure optimum operation, the demands should not exceed the number of vacuum users shown below. The chart lists the number of simultaneous High Volume Evacuators (HVEs) and Saliva Ejectors (SEs) that can be used by the **MOJAVE LT** system.

Recommended Number of Simultaneous Users

Part No.	Simultaneous Users	HP
LT3M	Up to 4	1.4
LT5M	Up to 6	1.7
2LT3M	Up to 7	2.8
2LT5M	Up to 11	3.4

Important: Vacuum cuspidors and vacuum sinks cannot be connected to the LT system. Their use will damage the system and void the warranty.

SPECIFICATIONS

Electrical Specifications (Per Pump)	LT3M/2LT3M	LT5M/2LT5M
Voltage @ 60 Hz (Volts AC ± 10%)	220	220
Voltage @ 50 Hz (Volts AC ± 5%)	220	220
Full Load Current (Amps AC)	15	15
Input Frequency (Hz)	50/60	50/60
Preset Vacuum Level (InHg)	8	8
Horsepower	1.0 kW or 1.4 HP	1.3 kW or 1.7 HP

System Environmental Conditions (All Systems)

Operating Temperature	50 to 105°F or 10 to 40°C
Storage and Transport Temperature	32 to 158°F or 0 to 70°C
Operating Relative Humidity	80%, no condensation
Storage and Transport Relative Humidity	90%, no condensation

UL60601-1 CLASSIFICATION

Protection against electrical shock (5.1, 5.2) Class I, Transportable, Continuous Operation. No applied parts. Protection against ingress of liquids-Ordinary Equipment not suitable for use in the presence of flammable anaesthetic mixture with air or with oxygen or nitrous oxide.

All **MOJAVE LT** vacuum pumps comply with NFPA 99C level 3 requirements.

MOJAVE LT consists of the major components shown by Figure 1.

- ❑ A single-stage pump, where all of the wetted metal parts are nickel plated or stainless steel.
- ❑ A metal electrical enclosure that houses a VFD (Variable Frequency Drive), circuit breaker, and PCB. A metal chassis for mounting components.
- ❑ An aluminum heat exchanger to cool the exhaust air from the pump before it travels through the exhaust vent.
- ❑ The LCD touch screen provides the operational user interface for the **MOJAVE LT** system.

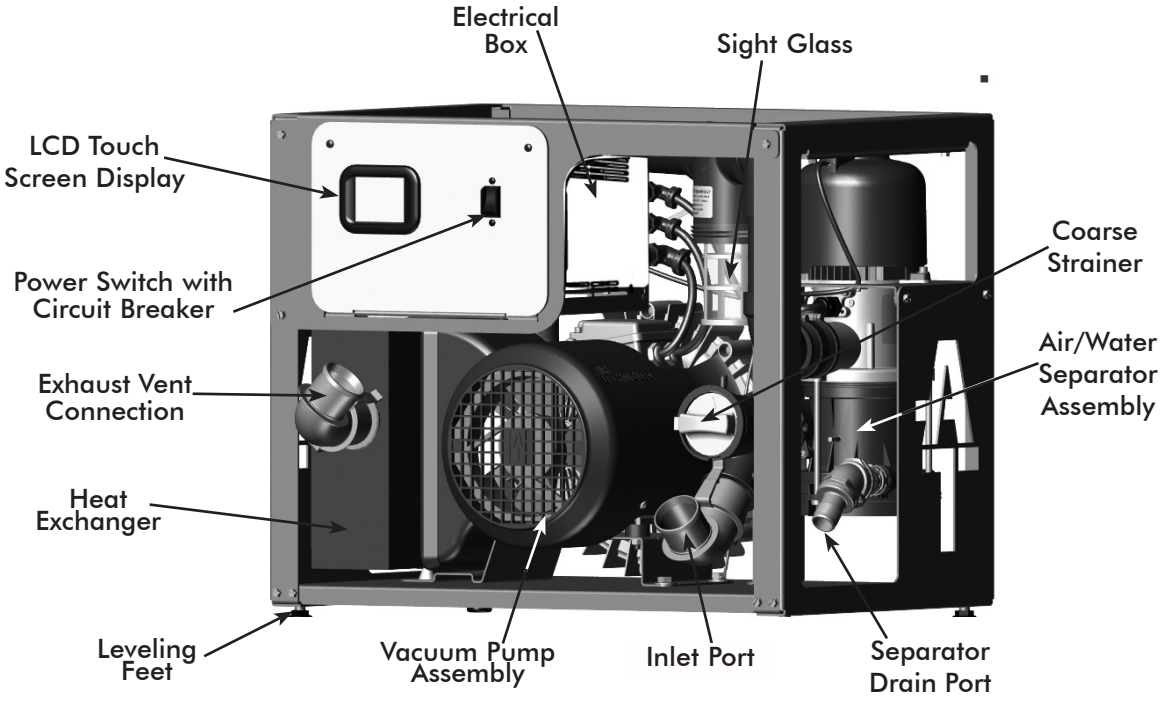

Front View Parts Location

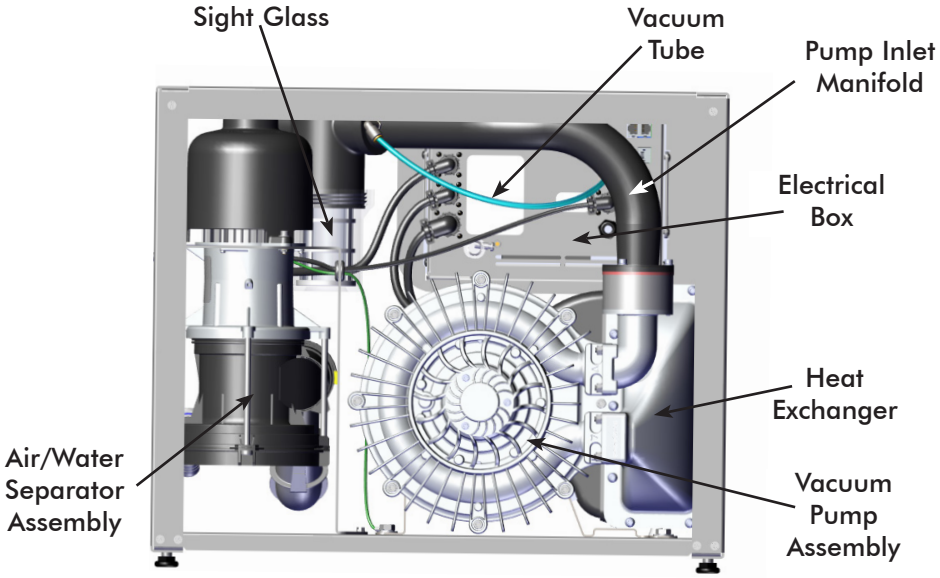

Rear View Parts Location

Figure 1. MOJAVE LT Key Parts Identification

MOJAVE LT Dry Vacuum System Operation.

1. Air, water, and solids from the treatment room enter the system via the Inlet Port and are pulled into the mechanical air/water separator assembly.
2. Air is then expelled to the outside vent through the pump heat exhaust.
3. Liquids and solids exit through the drain line of the separator.
4. The LCD touch screen provides the operational user interface for the **MOJAVE LT** system. It monitors and displays the frequency, vacuum level, RPM reading and temperature as well as recording the run time in hours.

Automatic Vacuum Adjustment.

When an instrument (suction tip) has been opened, the system senses an increase in vacuum demand and responds by increasing the speed of the motor.

Conversely, when an instrument (suction tip) has been closed, the system reads the elevated vacuum level and responds by slowing motor operation down due to decreased vacuum demand.

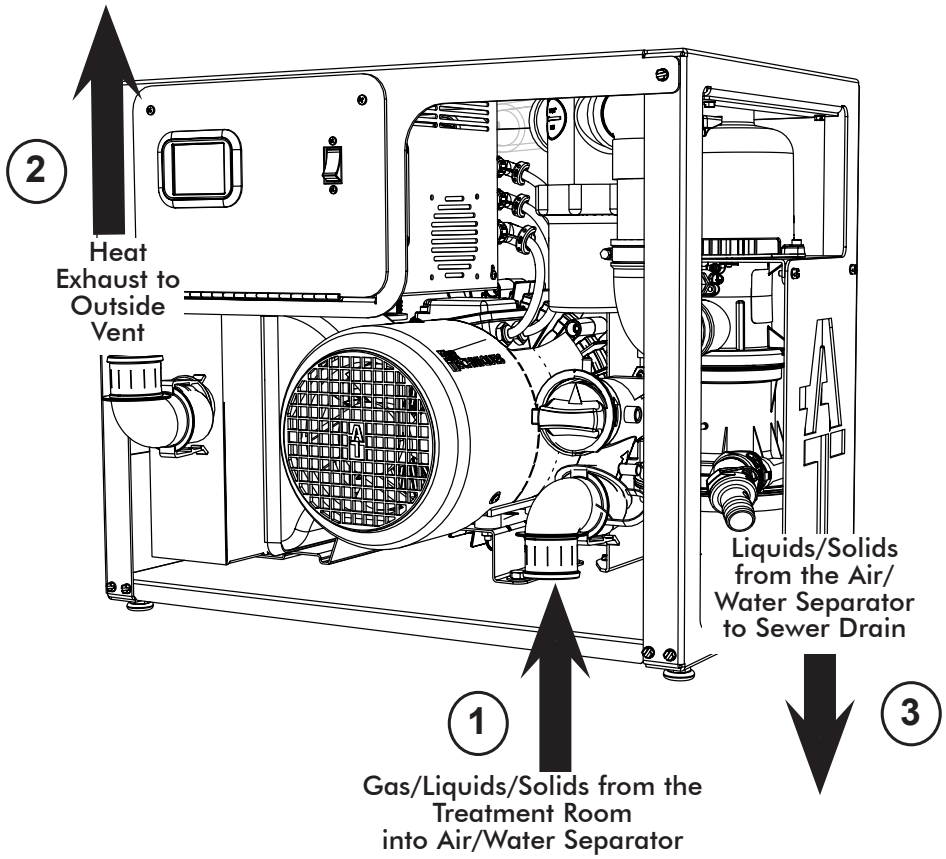

Figure 2. MOJAVE LT, LT3M and LT5M, Functional Connection Points

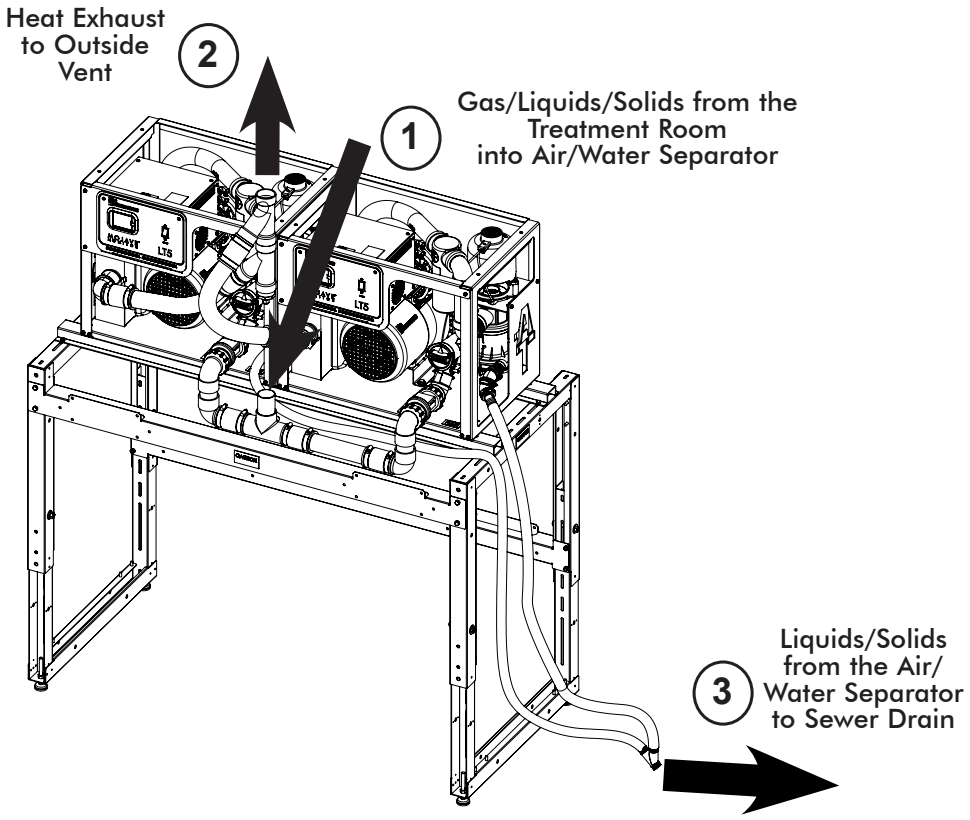

Figure 3. MOJAVE 2LT3M and 2LT5M, Side by Side System Connections

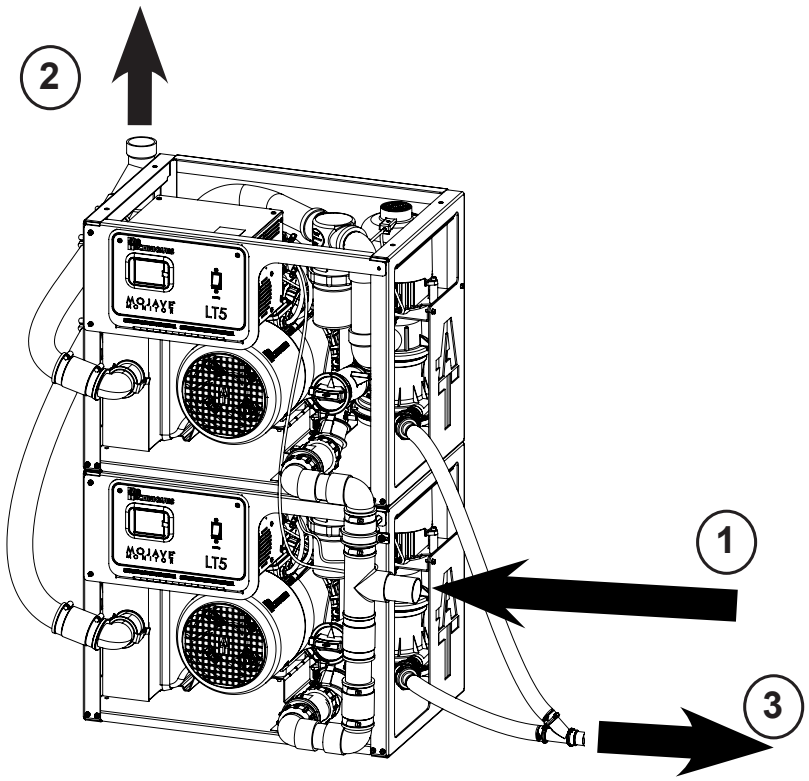

Figure 4. MOJAVE 2LT3M and 2LT5M, Stacked System Connections

INSTALLATION INFORMATION

General. For new installations it is recommended to follow the following guidelines:

- ❑ Make sure to install the system in accordance with all local electrical and plumbing codes.
- ❑ The suction line should not have any sharp right angle bends and must be sloped a minimum of ¼ inch for every 10 feet toward the **MOJAVE LT**.
- ❑ The drain on the base of the air/water separator must be connected to a vented or an open floor drain capable of handling 5 gallons in 1 minute. Drain tube size 1 inch.
- ❑ The drain line must be a full gravity drain. Avoid any sharp right angle bends.
- ❑ Make sure to install the supplied exhaust vent assembly to the bottom end of the facility vent line.
- ❑ The vent should be sloped ¼ inch per 10 feet towards the pump. Vent lines must be capable of handling vapors and liquids.
- ❑ The outside vent must be protected from rain and animals.
- ❑ A flexible air exhaust hose is provided to connect to the 1½ inch diameter vent pipe and heat exchanger. 1½ inch no-hub adapter is provided to secure hose to heat exchanger and pipe.
- ❑ Run a network cable into the room where you will set up your Mojave to allow connection to the Vision Monitor.

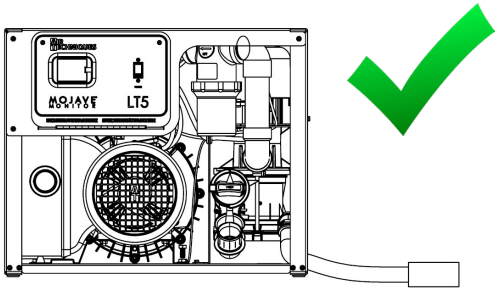

Properly installed gravity drain.

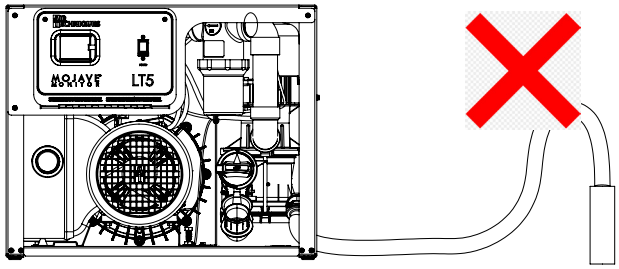

When routing the drain hose along the floor, avoid forming a loop that rises against gravity.

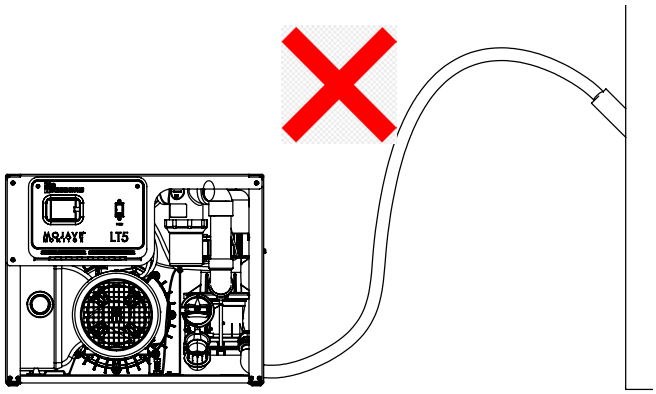

Avoid running drain hose againt gravity into a sink, tub, or other drain fixture that sits higher than the vacuum.

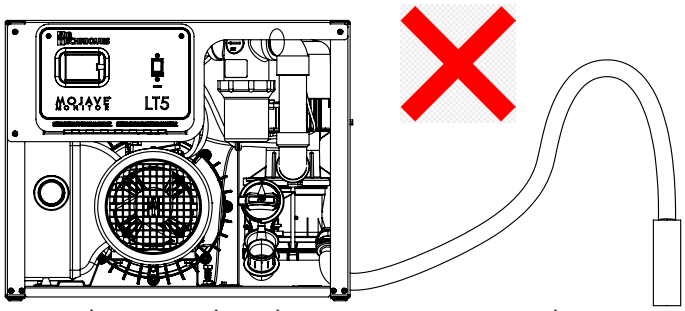

Avoid running drain hose against gravity when installing into a floor drain.

Figure 6. MOJAVE LT Proper Drain Connection

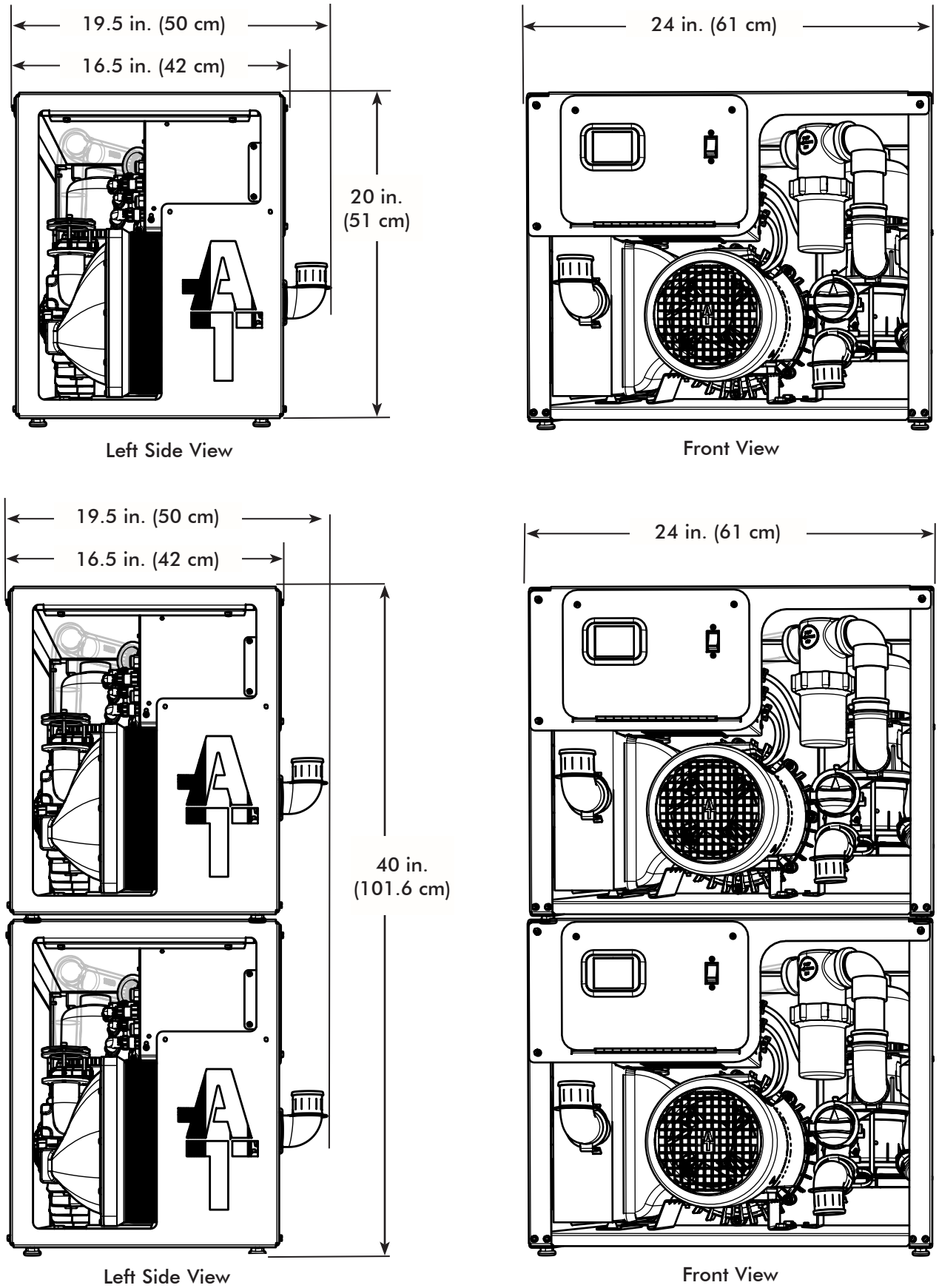

Figure 7. MOJAVE LT, LT3M, LT5M, 2LT3M and 2LT5M, Vacuum Pump Dimensions

INSTALLATION INFORMATION

MOJAVE 2LT Installation Procedure. Add a MOJAVE LT Dry Vacuum to an existing system by performing the following procedure.

1. **Power Removal.**
   a. Disconnect Mains power from the existing unit. Hardwired units require complete Mains power removal and a licensed electrician may be necessary.
   b. Place the MAIN circuit breaker on front of electrical panel to the OFF position.

2. **Existing Hose Removal.**
   a. Disconnect and remove all hose connections from existing MOJAVE.
   b. Set hoses aside for later use.

3a. Side by Side MOJAVE to be Installed.
   a. Install MOJAVE LT units side by side on ground or on Utility Stack Rack XL

3b. Stacked MOJAVE to be Installed.
   a. Stack the new MOJAVE on top of the existing MOJAVE.
   b. Align three screw holes (rear right corner and two front corners.)
   c. Secure using three (3) supplied screws, flat washers, and split washers from kit (P/N H4332)).

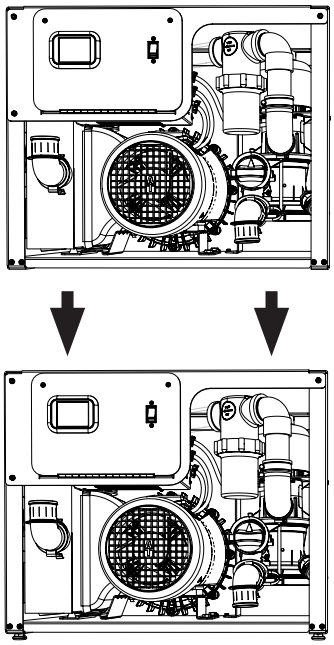

Step 3b. Chassis Stack

4. **Suction Inlet Manifold Installation.**
   a. Decide whether the installation will be side by side or stacked.
   b. **For stacked only:** Unscrew the bolt on the right side of bottom pump's chassis that sits below the two bolts on the top's. Screw mounting assembly (P/N H4340) in the threaded hole the bolt was in.
   c. Assemble inlet manifold (P/N H4330) for stacked, Utility Stack Rack XL, or for ground installs. Use 11" PVC piece for side by side installation and 6.25" for stacked installs.
   d. Once assembled, completely unscrew compression fitting on the ends of the manifold. Take the loose ends with their rubber gasket and slip a 45° elbow (P/N H4063) into each end so the orientation has the rubber gasket facing away from the elbow.
   e. Ensure each gasket is seated properly and screw the ends back on the manifold
   f. Take the other end of the 45° elbow and secure it on the inlet of both MOJAVE unit's Air Water Separator by slipping both on.
   g. Secure the manifold with the mounting assembly for stacked installations and with zip ties for side by side installations.
   h. Make sure all flexible couplings are tightly fastened and that mounting of the manifold is secure.
   i. Connect supplied poly-tube from vacuum port tee-fitting and connect to each units transducer port respectively.

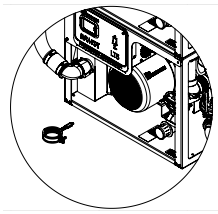

Stacked Mounting

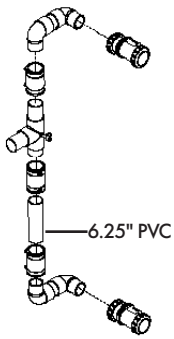

Stacked Inlet

Step 4i. Transducer Ports

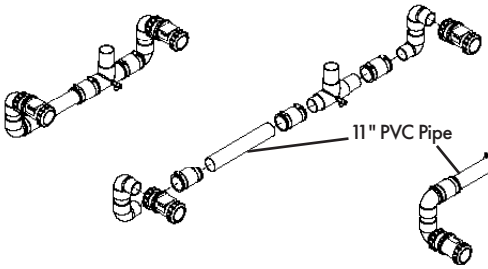

Side by Side Manifold for ground

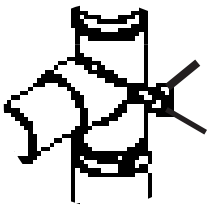

Step 4i. Vacuum Ports

Step 4. Vacuum Inlet Manifold

5. Water Outlet Connection.

a. Assemble the drain connections to the outlet of the Air Water Separator with the most suitable fittings for the system's drain with the supplied fittings in the installation kit.

b. Connect water outlet hoses together using the Y-Distributer connector (P/N 56778) from kit. (See Step 5))

6. Heat Exhaust Connection.

a. When installing the two LT units, a reducer and Y adapter (not included) must be added to connect both vent tubes to a common 3-inch exhaust line. Install the supplied Drip Leg Assembly (H4095) to the bottom end of the facility line.

b. Attach 10MM Urethane Tibing (P/N 54509) between Drip Leg Assembly drain port and the facility sewer drain.

c. Connect the top exhaust hose to the upper 'WYE' and the bottom exhaust hose to the lower 'WYE'. (See Step 6)

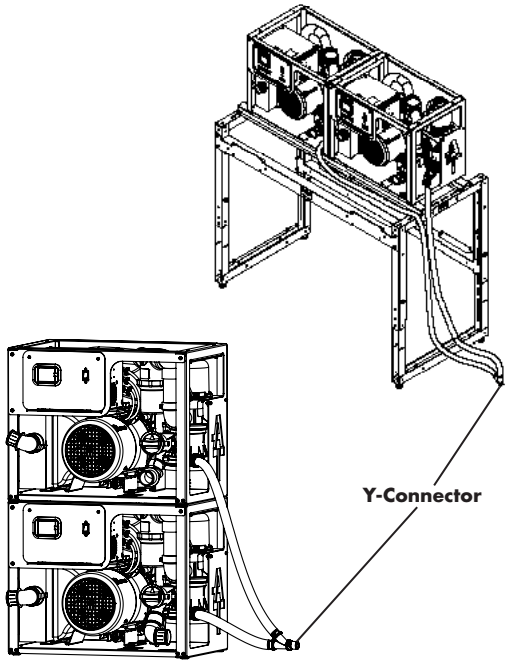

Step 5. Water (liquid) Outlet Connection

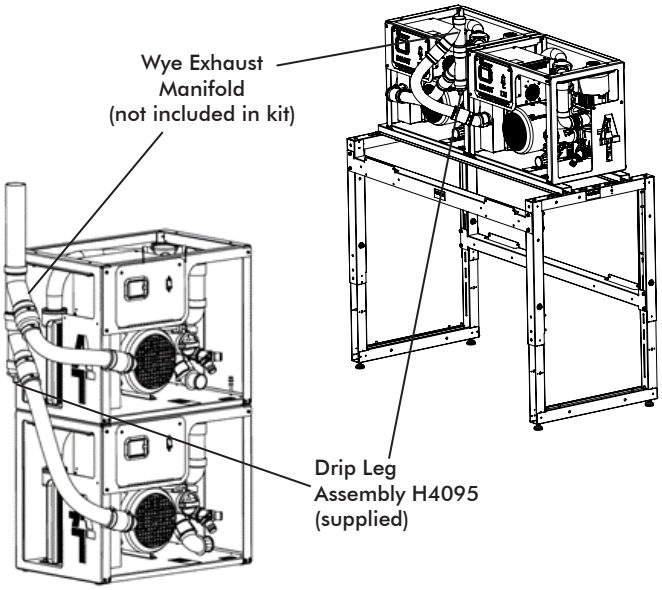

Step 6. Heat Exhaust Connection

7. CANBUS and Power Connection.

a. Locate the additional kit, P/N H4082, which includes the hardware needed for interfacing the two systems.

b. Plug one end of the CAT5/6 cable into any open port on either unit. Make sure that the cable is inserted into the AUX LINK port 1 or 2 and NOT the Ethernet port.

c. Insert the other end of the CAT5/6 cable into an open AUX LINK port of the second unit.

d. If not already inserted previously, take the two RJ45 Termination Resistors from the hardware kit and insert them into the remaining AUX LINK port on each device.

e. Connect each **MOJAVE LT** to power. Hardwired units require complete Mains power and a licensed electrician may be necessary.

f. On the Master device screen click on System Settings->Access Level->Technician and Save.

g. Select System Settings->Parameters->Auxiliary/Main and set the Master Unit as "Main Control Unit".

h. Repeat steps f through g for the Auxillary device, this time set the Auxillary unit as "Auxiliary Unit".

8. System Operation Check.

a. Place the MAIN circuit breaker of each **MOJAVE LT** to the ON position.

b. Verify both vacuums are operating and there are no air or fluid leaks.

INSTALLATION INFORMATION

Site Requirements

Electrical	LT3M	LT5M	2LT3M	2LT5M
Voltage Rating Volts AC	220 Volts, Single Phase AC, 50/60 Hz			
Voltage Minimum/Maximum	198/242 Volts AC @ 60 Hz | 209/231 Volts AC @ 50 Hz			
Wire Size AWG Minimum Gauge	#12 AWG			
Minimum Circuit Breaker Rating	20A		2 x 20A	
Incoming Power	Hard wire Connection (unit is supplied with a 6 foot BX cable)			
Remote (Low Voltage Wiring)	#18 AWG Wire Connection between the pump and the Remote Switch Panel. Use of a high voltage switch not allowed.			
Power Application	Constant power MUST be supplied to the system at all times. Applications where power cannot be constantly provided, such as in many mobile dentistry environments, are not recommended for use with this system and will void the warranty.			
Plumbing	**LT3M**	**LT5M**	**2LT3M**	**2LT5M**
Exhaust Vent Pipe	1 ½″ PVC Sch. 40		One 2" or Two 1 ½″ PVC Sch. 40	
Minimum Suction Line Pipe	1″ PVC Sch. 40	1 ½″ PVC Sch. 40	1 ½″ PVC Sch. 40	2″ PVC Sch. 40
Maximum Suction Line Pipe (See note 2)	1 ½″ PVC Sch. 40	2″ PVC Sch. 40	2″ PVC Sch. 40	2 ½″ PVC Sch. 40
Riser Pipe	½″ PVC Sch. 40			
Vacuum Line Termination	1 ½″ Spigot			
Drain Hose	1" Corrugated, A full gravity drain is required.			

NOTES

1. Recommended for all new installations.

2. Use maximum internal diameter for the main line when preparing any new installation.

Recommended Space Requirement

	LT3M, LT5M	Stacked 2LT3M, 2LTM5	Side-by-Side 2LT3M, 2LT5M
Height	20 in. (51 cm)	40 in. (102 cm)	40 in. (102 cm)
Width	24 in. (61 cm)	24 in. (61 cm)	48.5 in. (123 cm)
Depth	16.5 in. (42 cm)	16.5 in. (42 cm)	16.5 in. (42 cm)

Installation Layout Space. Figure 6 shows the requirements for the installation of MOJAVE LT. Please note that all units are shipped with leveling feet set to lowest position. Heights can be increased by 1 inch by adjusting the leveling feet. Refer to Figures 7 and 8 for connection details.

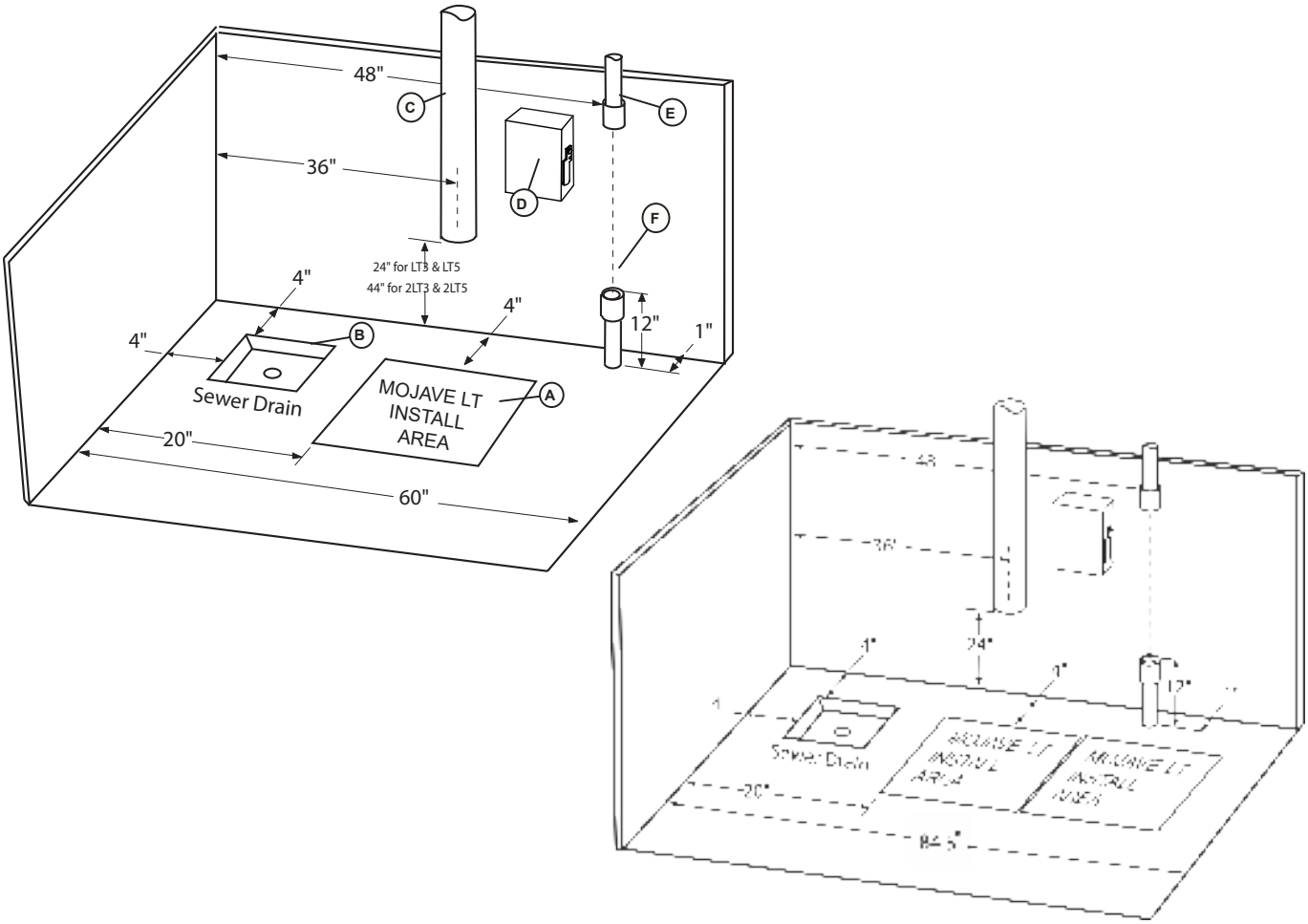

Figure 8. MOJAVE LT System Floor Plan

Installation Notes.

A. **PUMP INSTALLATION SPACE -** Area for **MOJAVE LT** pump in typical installation.

B. **SEWER DRAIN -** Provide a drain for the removal of waste liquids from the Air/Water Separator assembly. Use an open drain pipe (1 ½ inch P-Trap with 1 inch air gap or floor sink) or a closed vented drain. See Figure 6.

C. **HEAT EXHAUST -** Refer to Figure above and see Plumbing Requirements for the exhaust vent line required for **MOJAVE LT**. Schedule 40 pipe can be used on **MOJAVE LT.**

D. **PUMP ELECTRIC SERVICE -** The **MOJAVE LT** pump is wired directly with a dedicated 220V, 20 AMP, single phase 50/60 Hz circuit. If Main Circuit panel is not located in equipment room, a disconnect box with approved ground is needed for each pump. Disconnect boxes should be mounted no more than 3 feet of the installation center line.

E. **OVERHEAD INSTALLATION VACUUM LINE -** See Plumbing Requirements for **MOJAVE LT** connection.

F. **SUB FLOOR INSTALLATION VACUUM LINE -** See Plumbing Requirements for **MOJAVE LT** connection.

Important: Make sure to efficiently use space by making connections as short and direct as possible to meet your particular site requirements.
Make sure that all hose connections are straight and secure without any sharp bends or kinks.
Since the vacuum hose is rigid, make sure not to stress connections especially at the pump inlet.

MOJAVE LT Connection Procedure. Using industry standard techniques, make the three connections between the LT with supplied components from accessory kits Refer to Figure 7 for the connection diagram and perform the following procedure.

1. **Treatment Room Suction Line to Pump Inlet Connection**. Refer to Figure 7, item (1) .
   a. Install one connector adapter to the pipe (either overhead or sub floor) from the operatory.
   b. Install the connector adapter into the flexible coupling connector on the LT.
   c. Install the 1½" ID, clear hose cut for installation between the operatory suction line and pump inlet and secure with two no-hub adapters.
2. **Heat Exhaust Connection**. Refer to Figure 7, item (2) for the location of the vent hose connection at the pump heat exchanger output and the facility vent line. Make the heat exhaust connection by performing the following procedure.
   a. **Exhaust Vent Assembly Installation**. Refer to Figure 8 and install the Drip Leg and Exhaust Vent Assembly to the bottom end of the facility vent line. Install a length of 1/4 inch OD Urethane Tubing (P/N 51453) between the vent condensation drain port and facility sewer drain.
   b. **Heat Exhaust Vent Connection**. As shown by Figure 8, connect the vent hose between the pump heat exchanger output and the facility vent line. Secure with no hub adapters provided by the accessory kit.

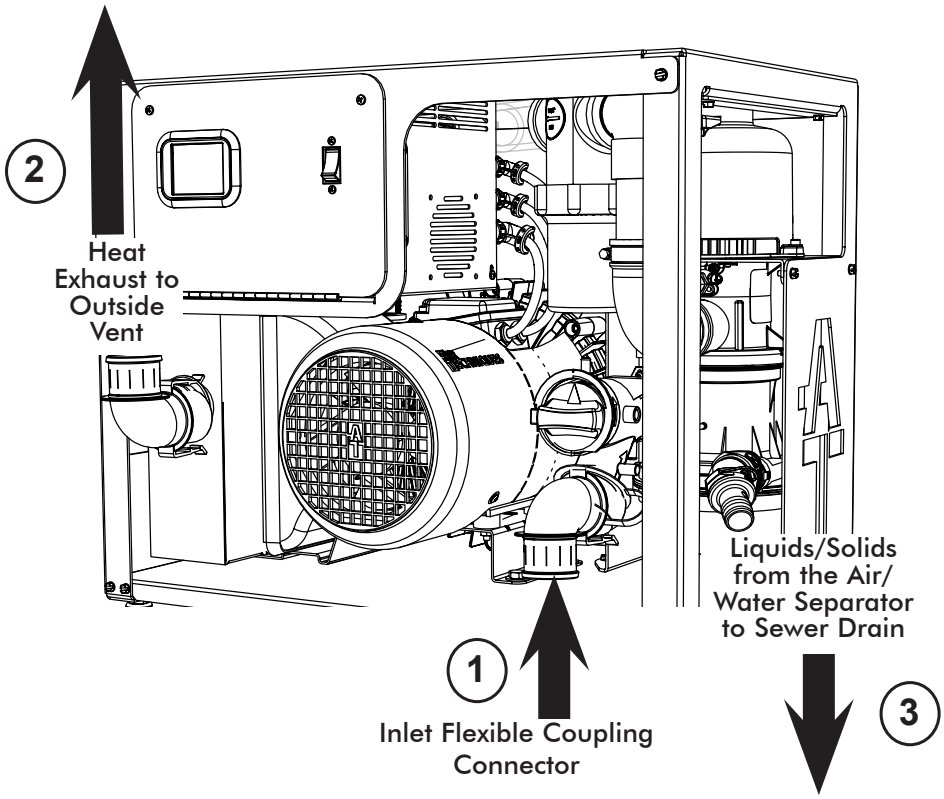

Figure 7. MOJAVE LT Plumbing Connection

3. **Drain to Facility Sewer Connection**. Refer to Figure 8, item (3) for the location of the Air/Water Separator drain. Use the 1-inch hose provided to connect the separator drain to the facility sewer. As shown by Figure 8, the sewer connection can be made as either a closed vented drain or open drain pipe method.
4. **System Electrical Connections**. Refer to the Electrical Connections section (See Figure 9.) and connect the pump to 220V facility power. Refer to Figures 10 and 11 when connecting the low power remote switch. Do not use a high voltage switch to turn power off remotely. Unit must remain powered at all times.

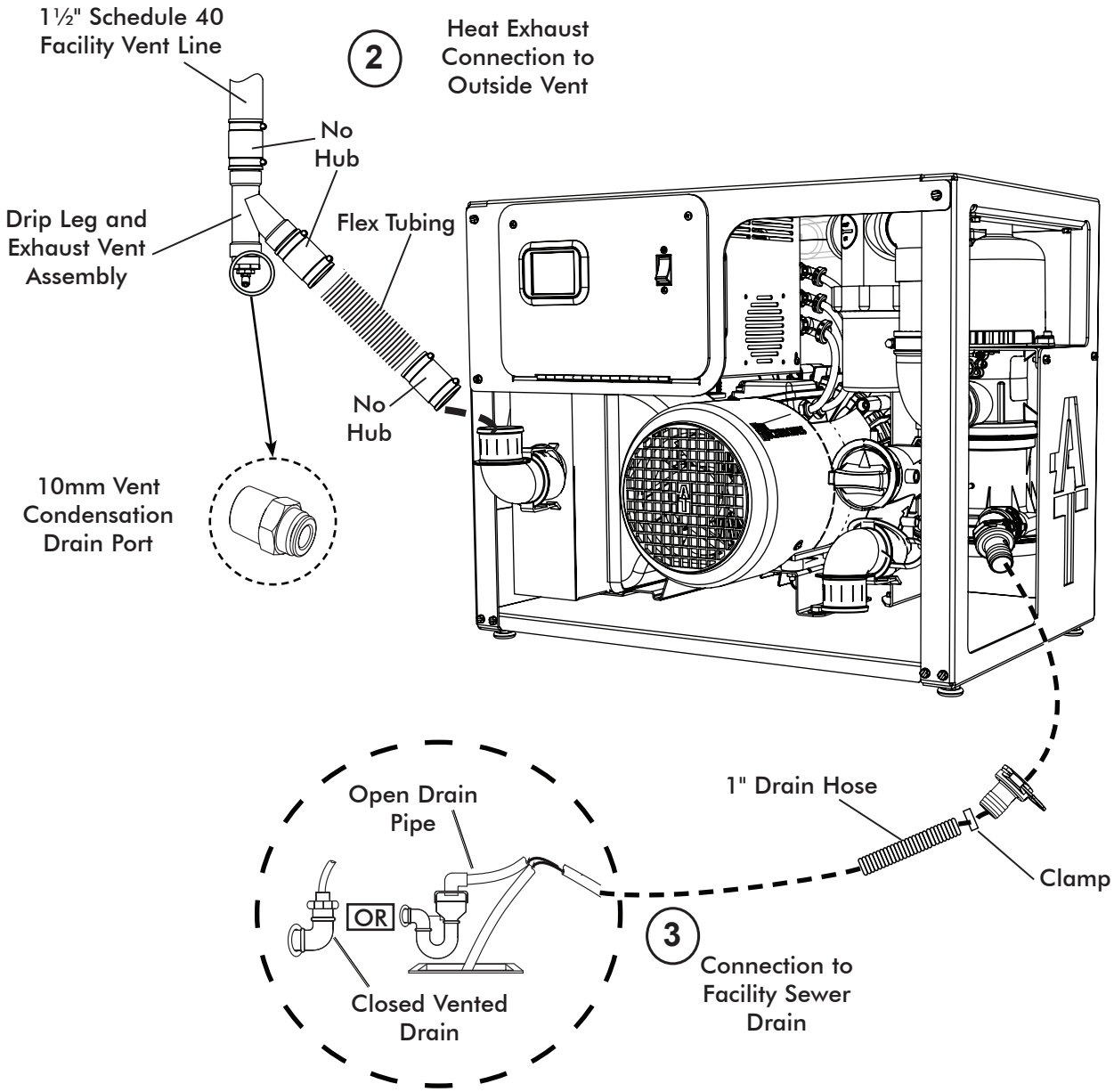

Figure 8. MOJAVE LT Detail Plumbing Connection

ELECTRICAL CONNECTIONS

Remove all power to the system prior to working within the electrical box. Contacting high voltage can cause serious injury or even death.

All systems must be wired directly from an electrical box that complies with local electrical codes.

MOJAVE LT Pump Direct Power Connection.

Each unit is wired directly to an dedicated 220V, 20 AMP single phase 60 Hz circuit via a disconnect box with approved ground. Disconnect boxes should be mounted no more than 3 feet of the installation center line.

Figure 10 shows the wiring of the electrical BX cable used to connect the LT directly to facility input power.

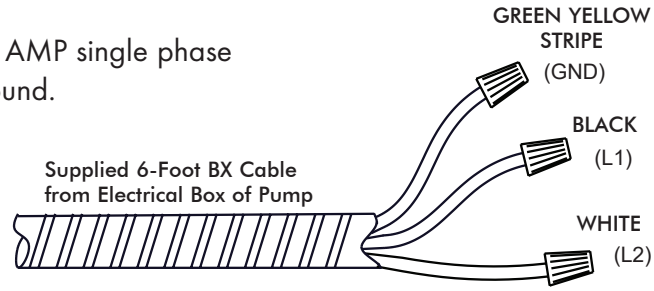

Figure 9. MOJAVE LT Power Connection

Remote Switch Connections.

As shown by Figure 10, connections are made via connectors J4 and J6 of the main board.

VDC Connections.

Make the 6 VDC connections shown by Figure 11, View A, for Remote Panel Switch #53202-1 provided by Air Techniques. Make the 24 VDC connections shown by Figure 11, View B, for Remote Panel Switch #53201-1. When using a switch not provided by Air Techniques, all remote system status indication is lost.

Important: Use CAN BUS Termination Resistor, P/N 85133, when making tandem pump connections.

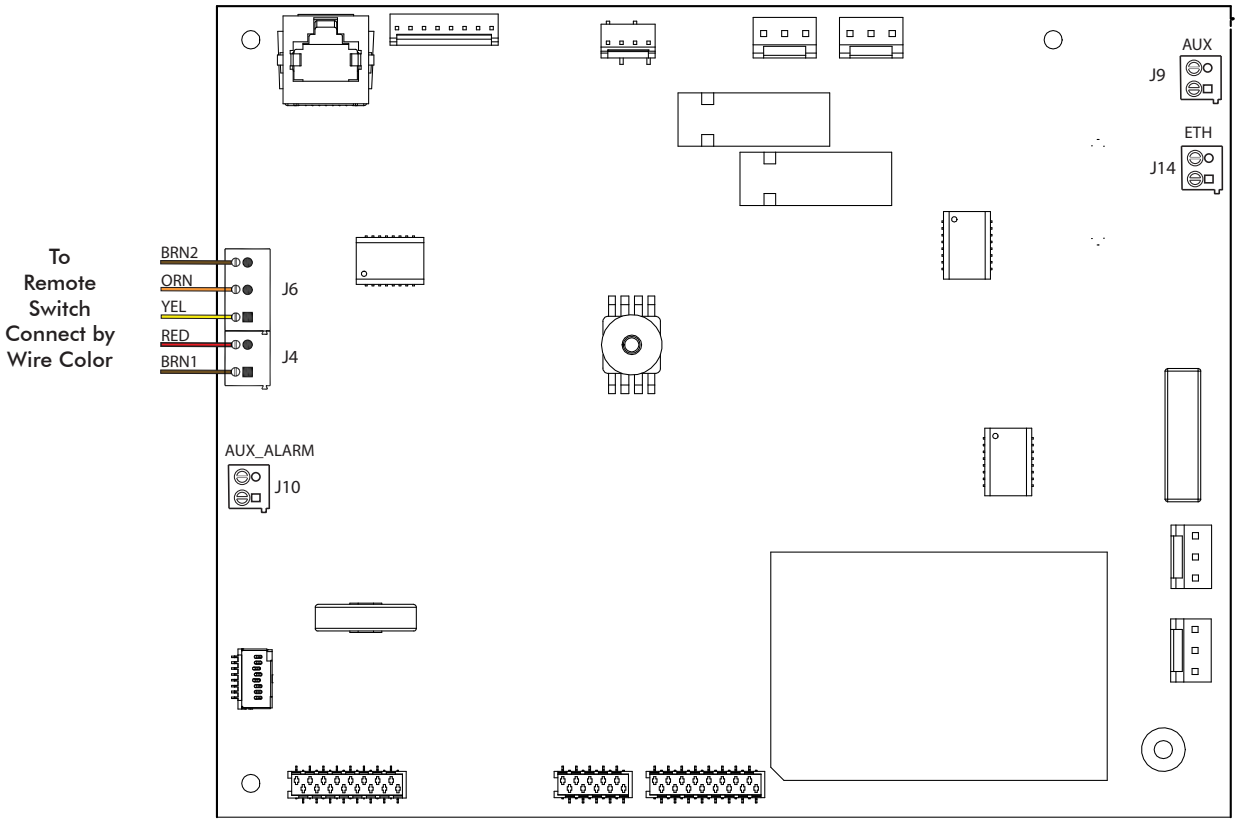

Figure 10. Remote Switch Connection to Main Board

Note: Use 18 Gauge for interconnect cable to connect between unit and remote switch.

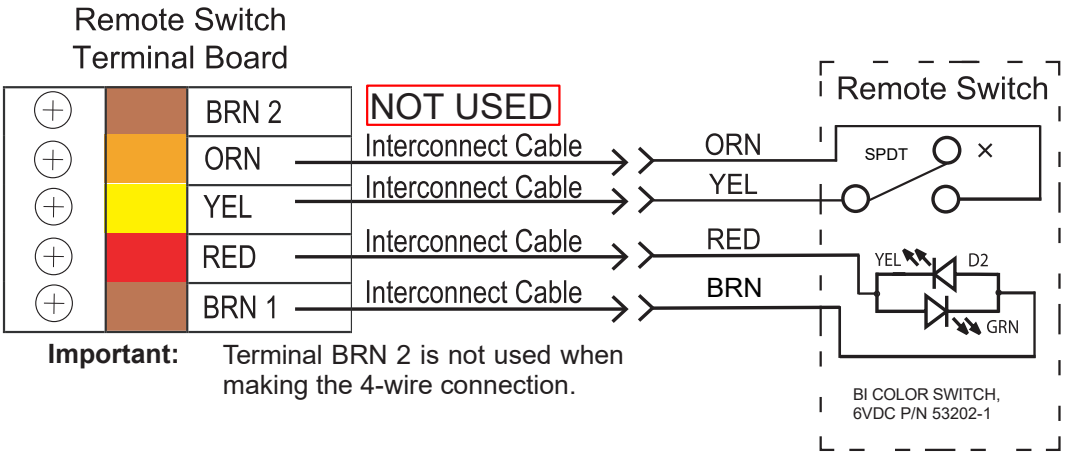

Important: Terminal BRN 2 is not used when making the 4-wire connection.

View A. 4-Wire Green & Yellow Indicators 6 VDC Remote Switch Installation

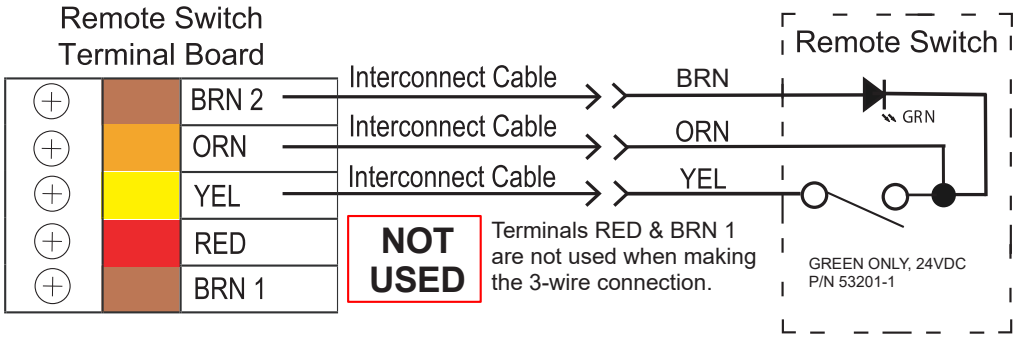

View B. 3-Wire Green Indicator Only 24 VDC Remote Switch Installation

Figure 11. 3-Wire and 4-Wire Remote Switch Connection

OPERATING INFORMATION

General.

- ❑ The vacuum level is factory preset at 8 InHg. This vacuum set point is adjustable from 8.0 to 10.0 inHg in increments of 0.5 inHg via the touch screen.
- ❑ System operation is automatically controlled. Parameters can be adjusted via the touch screen
- ❑ The system is capable of running continuously and should be put into standby mode when not in use.
- ❑ The system may be turned **ON** or put into standby mode from a single, convenient location within the dental office using an optional Remote Control Panel switch.

Mojave LT Standby and Run modes must be toggled from either the LCD touchscreen or the optional low voltage remote switch. The **Mains Circuit Breaker** must remain in the **ON** position at all times for the Self Diagnostic feature to run properly. Unit cannot be turned on/off using a high voltage switch connected to the main power source. Failure to do so will **VOID** the warranty.

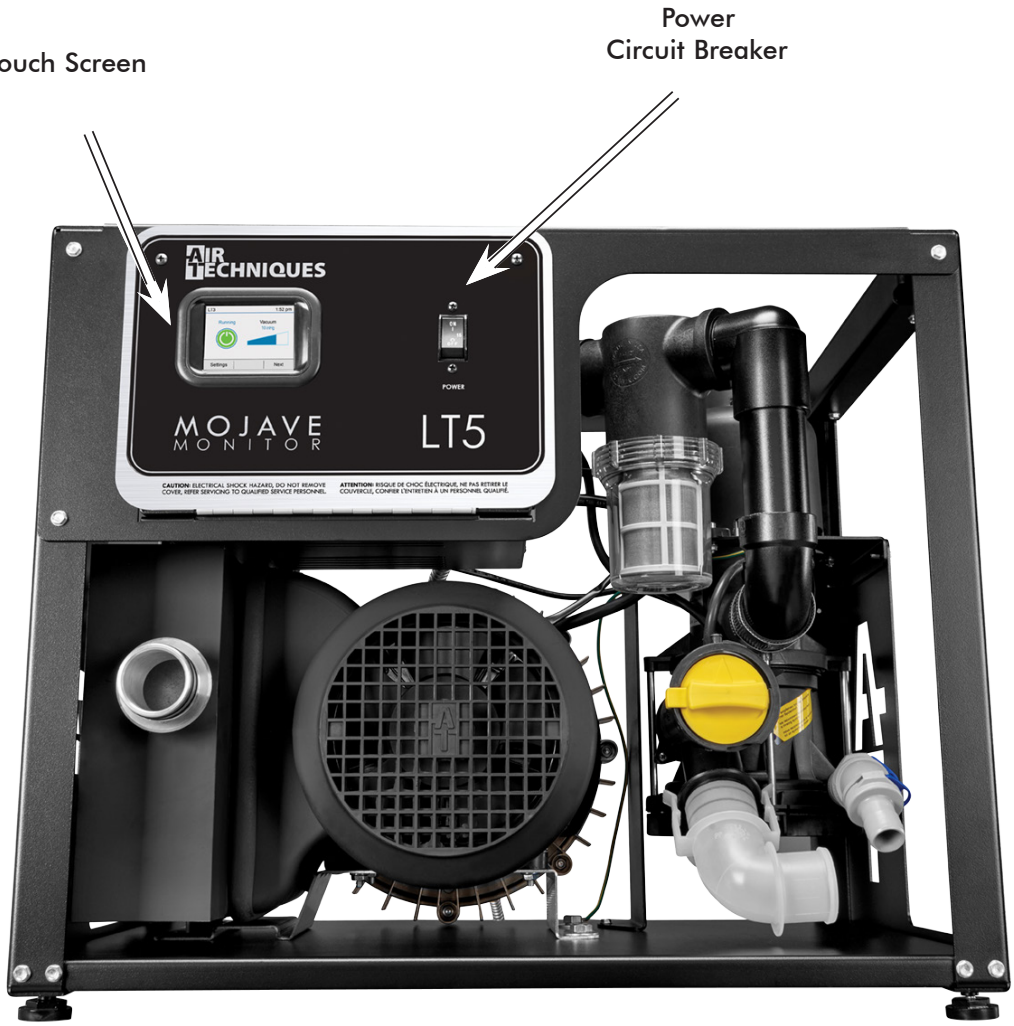

Figure 12. MOJAVE LT Front Panel Controls and Indicators

START UP BY TOUCH SCREEN

1. Set the motor **Mains Circuit Breaker** in the **ON** position.
2. Observe that the color touch screen illuminates and depress the blue **Standby** button.
3. Observe that the **Standby** button changes to a green **Running** button, that the unit is running and the **Vacuum** widget shows increasing pressure.

START UP BY OPTIONAL REMOTE SWITCH

1. Set the motor **Mains Circuit Breaker** to the **ON** position.
2. Observe that the when in **Standby** with no errors the push button indicator is extinguished.

   Note a: Depending on the site installation, the remote switch can be either a Bi-Color LED 6VDC switch (included) or a single LED 24 VDC switch.

   Refer to the tables below for the LED conditions for each switch during operation.

3. Depress the push button switch and observe that the associated indicator illuminates as listed for the corresponding switch.

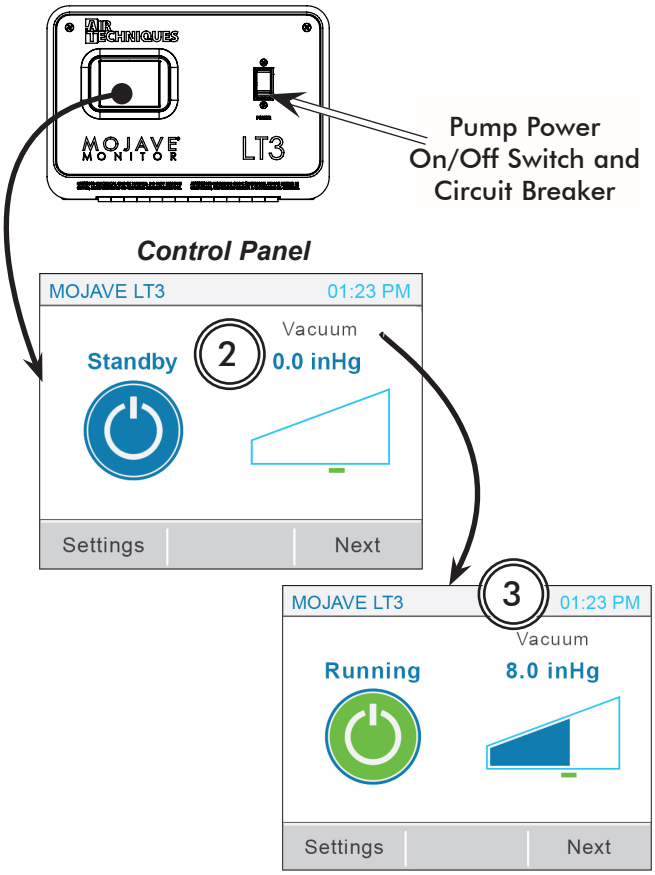

Color LCD Touch Screen Display

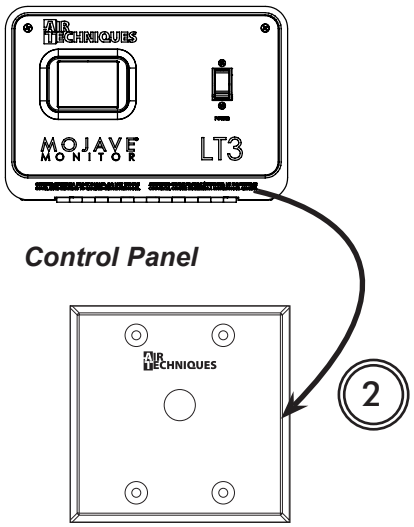

Optional Remote Control Panel

6V DC Bi-Color Green / Yellow Indicators (See Note a.)		
Bi-Color LED Condition	**Switch Position**	**Condition Description**
None	Out	Standby, No errors
Solid Green	In	Running, No errors
Flashing Yellow	Out	Standby, Error present
Alternating Green / Yellow	In	Running, Error present

24V DC Green Indicator Only (See Note a.)		
Green LED Condition	**Switch Position**	**Condition Description**
None	Out	Standby, No errors
Solid Green	In	Running, No errors
Flashing Green – Slow	Out	Standby, Error present
Green – Fast	In	Running, Error present

TOUCH SCREEN CONTROLS

Note: The motor power circuit breaker must be kept in the **ON** position to operate the color LCD touch screen display. See Operating Information on page 18.

All **MOJAVE LT** units have a color LCD touch screen display located on the front control box panel. This display is used to start the unit and show system operating status. It also serves as an input for controlling operation and adjusting system parameters.

The display shows two screens during normal operation; a Home Screen and a Settings Screen. The Home Screen is used to start and monitor operation of the **MOJAVE LT**, while the Settings Screen allows changes to operating parameters.

The screens are comprised of operation Buttons, Navigation Buttons and Widgets as described below.

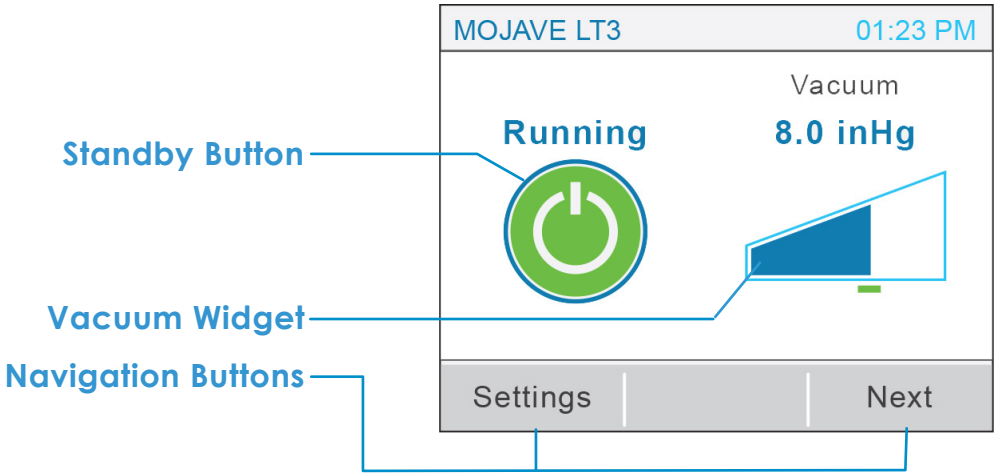

Operation Buttons

Standby Button - Home Screen Standby Button that when blue, indicates the system is in the "**Standby**" mode. When pressed, this switch starts the compressor operation.

Running Button - Home Screen Standby Button that when green indicates the system is in the "**Running**" mode. When pressed, this switch stops **MOJAVE LT** operation and returns to the "**Standby**" (blue button) mode.

Error Button - Home Screen Standby Button that when red indicates an error is present causing the **MOJAVE LT** to shut down operation.

Navigation Buttons - located on the bottom of the screen these buttons allow the user to migrate within a screen by going to the next screen level or to transfer between the Home Screen and a Settings Screen.

Widget - an element of a graphical user interface (gui) that is used to display information during vacuum operation. The Home Screen normally shows the Vacuum Widget while the Motor Frequency, Separator RPMs, Voltage and Temperature widgets are accessed by pressing the **Next** Navigation Button.

1. HOME SCREEN

a. STANDBY BUTTON / VACUUM SCREEN

i. **Standby Button**

- Running: Motor and separator run to maintain the set vacuum level of 8.0 to 10.0 inHg.
- Standby: Motor and separator are not running.
- Error: Motor and separator do not run.

ii. **Vacuum Widget** - Displays current vacuum level.

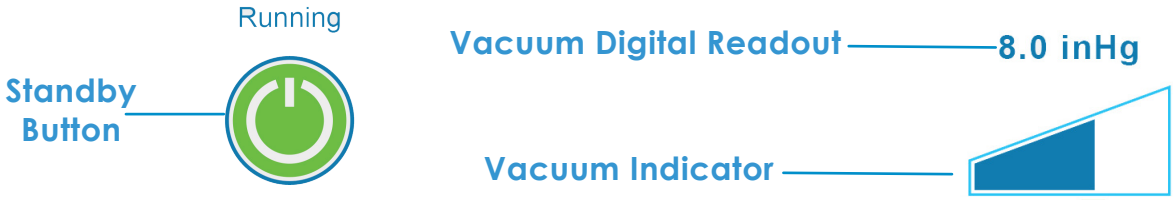

b. PUMP / SEPARATOR SCREEN

i. **Pump Frequency Widget** - Displays current frequency level with min/max range indicator.

ii. **Separator RPM Widget** - Displays current RPM value with min/max range indicator.

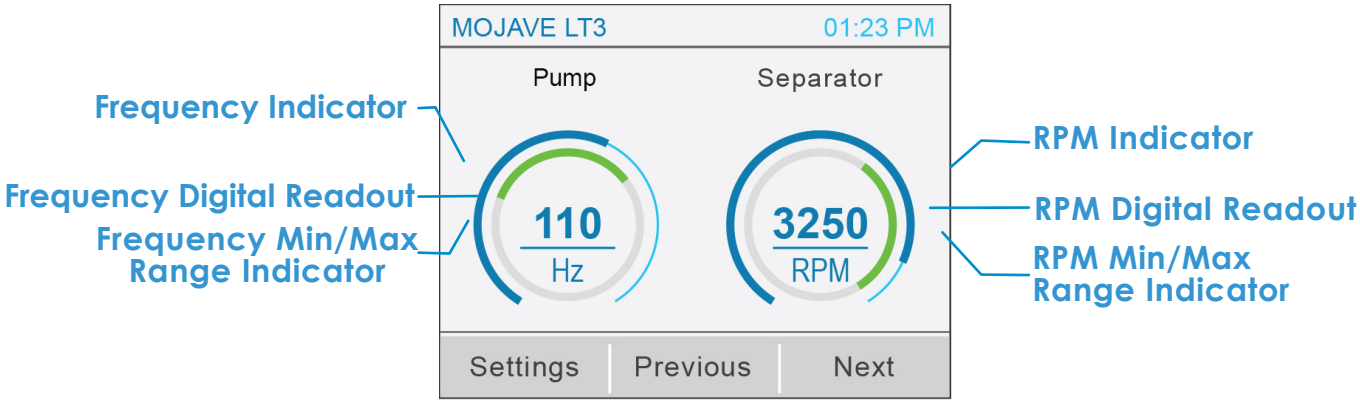

c. VOLTAGE / TEMPERATURE SCREEN

i. **Voltage (V) Widget** - Current line voltage with min/max range indicator.

ii. **Temperature (°F) Widget** - Current ambient temperature of room with max temperature limit indicator.

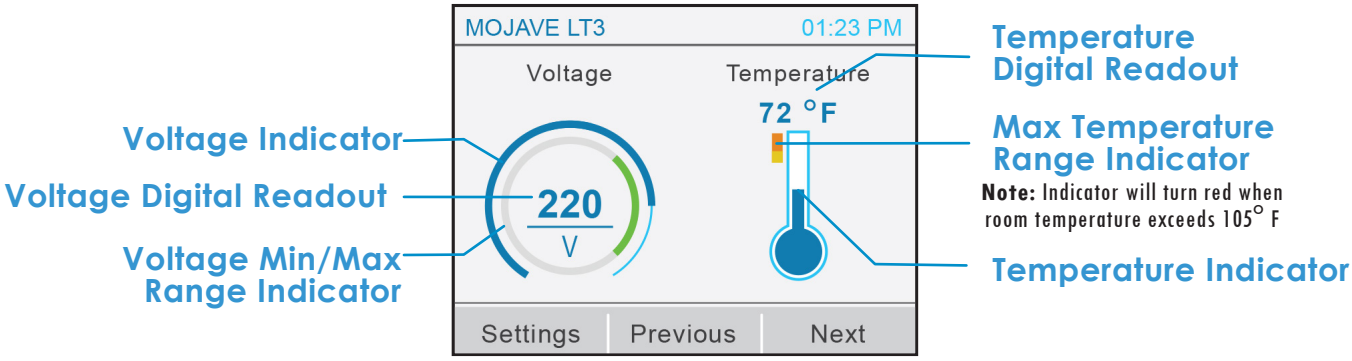

Setting Screen

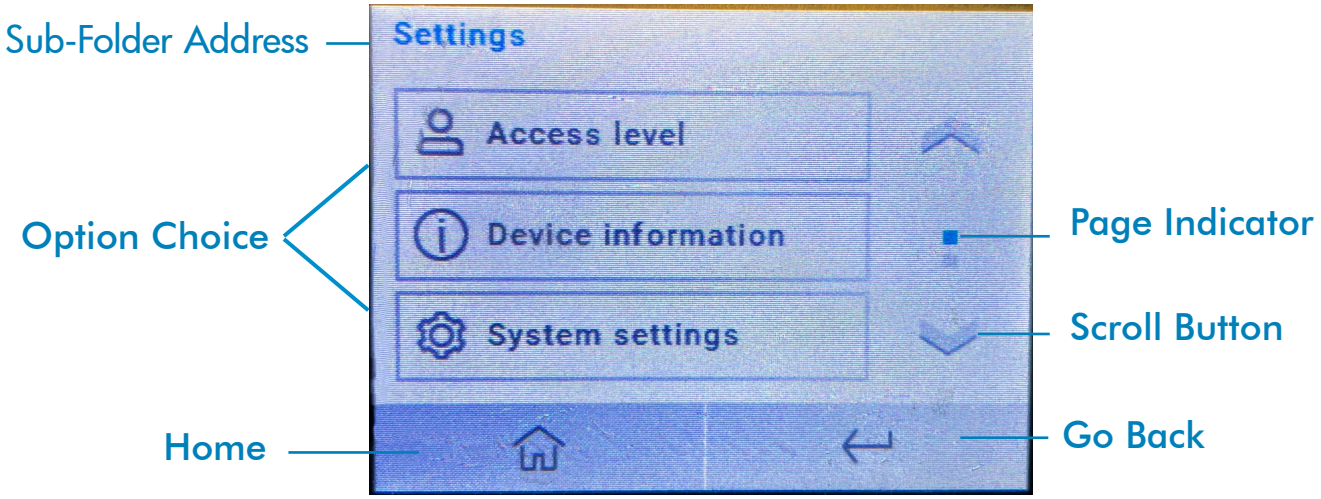

2. SETTINGS SCREEN

ACCESS LEVEL

i. **Operator** - Default setting on startup, this access level should be used when unit is not being serviced by a technician. Set level by pressing the radio button.

ii. **Administrator** - This access level is used by office personel for setting the date and time

iii. **Technician** - This access level is used when unit is being serviced by a technician to access all option choices. Set level by pressing the radio button.

Note: Access will save on exit by either HOME or BACK buttons

DEVICE INFORMATION

a. DEVICE INFORMATION

i. **Model** - Air Techniques model number.

ii. **SN** - Unit serial number.

iii. **VFD Code** - Indicates VFD Code number

iv. **PCB** - Indicates control board serial number.

v. **Firmware** - Indicates latest installed firmware and revision.

vi. **BLT Version.** - Boot Loader Version

b. DEVICE STATISTICS

i. **On-Time** - Shows time that unit has been powered on (hours)

ii. **Run-Time** - Shows time that unit has been running (hours)

SYSTEM SETTINGS

a. LANGUAGE

i. English

b. DATE/TIME

i. Automatic - Used to automatically set the date/time if a local intranet time server is available

ii. Time - Sets current time for selected time zone. Set time by pressing up or down arrows above or below each digit, then press the **SAVE** button.

iii. Date - Sets to current date. Set date by pressing up or down arrows above or below each digit, then press the **SAVE** button.

Note: When the time zone (UTC) is reset, the time setting may need to be set to match location.

iv. Time Zone - Sets time zone. Set appropriate UTC (see table) by pressing up or down arrows above or below each digit. Press the SAVE button and then power cycle (power off then on) device to save setting. After completing power cycle, verify the time matches location.

Time Zones Currently Being Used in United States

Time Offset	Time Zone		Example City
	Abbreviation	Name	
UTC - 5	EST	Eastern Standard Time	New York
UTC - 6	CST	Central Standard Time	Chicago
UTC - 7	MST	Mountain Standard Time	Salt Lake City
UTC - 8	PST	Pacific Standard Time	Los Angeles
UTC - 9	AKST	Alaska Standard Time	Anchorage
UTC - 10	HAST	Hawaii-Aleutian Standard Time	Honolulu

c. NETWORK

i. **DHCP: -** Indicates DHCP of connected network

ii. **IP-Address: -** Indicates IP-Adress of connected network

iii. **Netmask: -** Indicates Netmask of connected network

iv. **Gateway: -** Indicates Gateway of connected network

d. FACTORY SETTINGS

i. **Clear message history -** Erase all alarms in the message history

PARAMETERS

i. **Set Point -** Sets vacuum level between 8-10 inHg in 0.5 inHg increments by pressing up or down arrows. Press the SAVE button to accept setting.

ii. **Auxillary/Main Setting -** Set the device as Main or Auxillary in tandem configurations

MESSAGE HISTORY

Shows the last forty (40) alarms triggered. Push any listed ALARM button to get details of alarm, such as suggested tasks and date alarm was triggered.

ALARMS

MOJAVE LT checks operation via the Intelligent Monitoring System and alerts the user to problems by displaying Warnings or Errors in the upper left corner of the Home Screen. Warnings notify the user of conditions effecting operation while Errors are critical problems disabling operation. As shown below, explanation of the Warning or Error is expanded by pressing the displayed alert. Also refer to TROUBLESHOOTING, page 24, to correct additional problems.

a. WARNINGS

i. Line voltage is out of range. Contact Technician.
ii. Room temperature is too high.
iii. Room temperature is too low.
iv. Vacuum level is greater than 1.0 inHg over setpoint.
v. Vacuum level is less than 0.5 inHg over setpoint.
vi Control and auxillary unit are disconnected. Please check the connection
vii Pressure of control and auxillary unit is different.
viii Firmware of control and auxillary unit is different.
ix Connection setting changed. System will reboot in 10 seconds

Line voltage Warning Alert Example

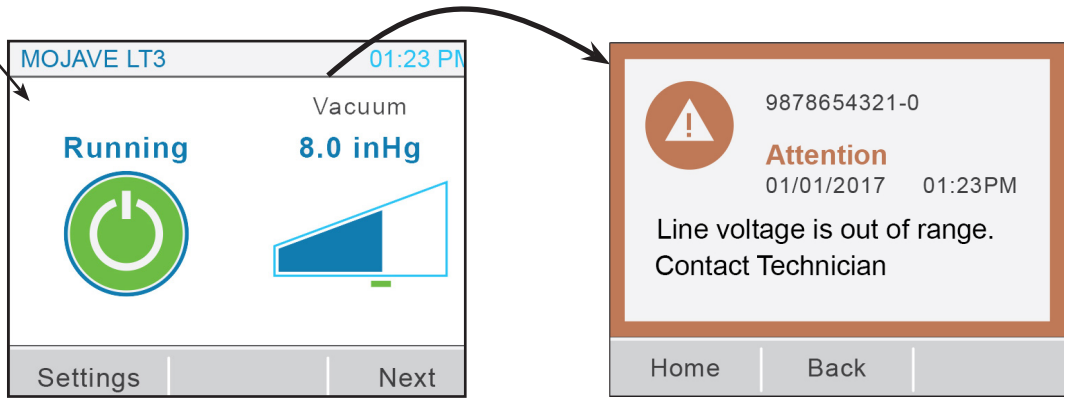

Home Screen Showing Warning

Example Warning Screen

b. ERRORS

i Pressure sensor malfunction. Contact Technician.

ii Room temperature above 120°F. Confirm and unit will restart when room is cooled.

iii Separator below minimum speed. Re-enable motor?

iv Motor VFD error detected. Contact Technician.

v Motor did not reach proper vacuum level during Bump routine.

vi Separator reading was 0 RPM when entering run mode. Check Separator functionality. Contact Technician.

vii Separator below critical operating speed. Confirm to resume system operation.

viii Separator failed to reach operating speed during startup. Contact Technician if problem continues.

ix Separator did not reach minimum RPM during Bump routine.

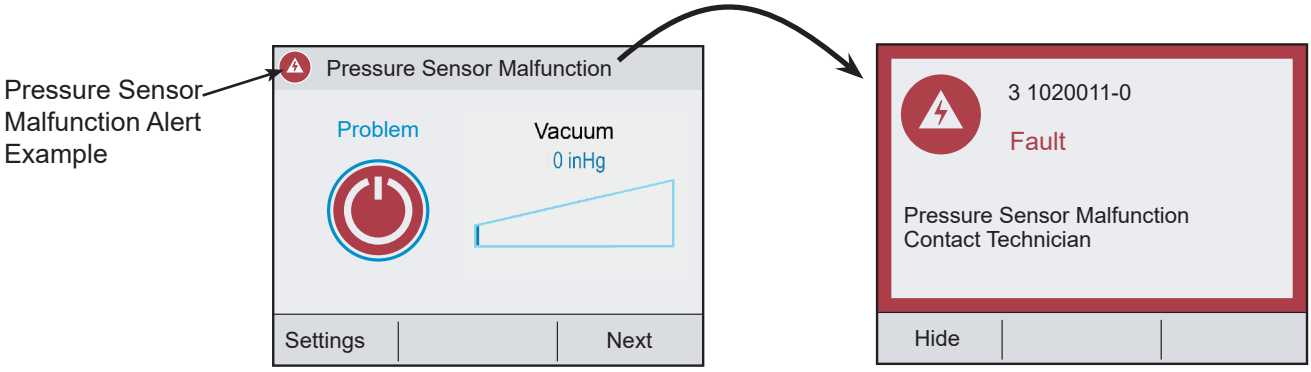

Home Screen Showing Error

Example Error Screen

VISTASOFT MONITOR

VistaSoft Monitor Remote Monitoring Solution

VistaSoft Monitor is a cloud based remote monitoring solution that provides valuable, real-time status information from your network connected Mojave LT Monitor directly to any internet devices via the web interface or mobile app. Connect your equipment to allow service technicians to quickly diagnose problems, update parameters remotely, check usage history, and minimize downtime. VistaSoft Monitor will also notify you when the equipment requires maintenance to ensure optimal performance and reliability year over year from your Mojave LT Monitor.

System Requirements

VistaSoft Monitor software installation requirements for a server or practice computer network:

Operating system:	Windows Server 2016 Microsoft Windows 10, 64-bit
Graphics board:	Resolution [3] 1280 x 1024 (recommended)
Interface:	Ethernet, DHCP/dynamic allocation of IP addresses Internet
Ports required:	502, 512, 514, 45123 - 45126, 50123
Additionally required software:	Mozilla Firefox, Google Chrome or Microsoft Edge (in the current version)
Peripheral equipment required:	Sound board, loudspeaker

Just a browser is needed for the user interface of the cloud.
The network connection of the devices needs to be stable, e.g. via LAN or via a stable WLAN
For stability reasons the use of e.g. PowerLAN is not recommended.

Installation

Please review the VistaSoft Monitor Installation Instructions for the complete guide on connecting your Mojave LT Monitor. To learn more about VistaSoft Monitor, please visit

https://www.airtechniques.com/vistasoft-monitor/

Warning: Cleaning agents that contain bleach or foam should not to be used in this system. These cleaners will leech mercury from amalgam and pollute our environment. Please use non-foaming, non leaching, and biodegradable CleanStream (PN 57850) for proper cleaning.

Initial Maintenance.

After installation, clean the vacuum lines with CleanStream Cleaner. This is especially necessary when a new system is being installed into existing dental system piping. Using CleanStream Cleaner helps the **MOJAVE LT** system to remove any built up deposits in the piping system. Perform the initial cleaning by performing the daily maintenance procedure provided below.

Maintenance-Free MOJAVE Pumps.

All **MOJAVE LT** pumps are designed for maintenance-free operation. The pump features a powerful 3-phase motor. The motor is completely water and oil-free and provides a dependable operation requiring no scheduled maintenance.

Preventive Maintenance.

Whenever a service technician fulfills a repair call at the customer site routine checks should also be performed to detect general overall wear, and replacement of parts should be made if necessary before a failure causes a prolonged shut-down. This preventive maintenance program will aid in dependable equipment operation and help reduce breakdown.

Scheduled Maintenance.

Since a well-organized maintenance program aids dependable equipment operation and reduces breakdown to a minimum, it is essential that the maintenance instructions be followed completely. The routine cleaning will remove any built up deposits in the piping system.

Daily

1. Clean drain lines from the operatory to the air/water separator with CleanStream Cleaner by performing the procedure provided on the next page.

Weekly

1. Check for noise and leaks.
2. Clean exterior surfaces
3. Make sure that no flammable, corrosive, or combustible materials are stored in the equipment room (especially in the area around the equipment).

Monthly

1. Check tubing for kinks or cracks.
2. Check drip leg for liquids on exhaust line.
3. Check for debris in the solids strainer.

Important: Evidence of buildup at the base drain most likely means that a stricter adherence to the daily maintenance procedure is required.

Semi-Annually Check the inlet filter on the pump assembly for buildup. The filter should be dry and clean. The presence of any liquid or debris means that the installation is incorrect or there is an issue with the air/water separator.

MAINTENANCE

WARNING!
Always use the proper personal protective equipment when in contact with biohazard waste.

Caution: The use of the following materials will result in equipment damage, loss of system performance and/or will void the warranty. **DO NOT USE:**

- Foaming cleaners
- Household cleaning agents
- Instrument cleaners/disinfectants
- Cleaning agents containing chlorine
- Abrasive Cleaners
- Solvents like acetone

Daily Maintenance - Clean Vacuum Lines

Clean all vacuum lines in the vacuum system with CleanStream Cleaner daily as part of the overall preventive maintenance program. This helps to maintain the cleanliness of the tank as well as the vacuum lines and tubing throughout the system. Using the 2.5 liter bottle of CleanStream Cleaner, PN 57850 and the CleanStream dispenser system, PN 57665.

Required - Not Supplied	
Part No.	**Description**
57850	2.5 Liter Bottle CleanStream Cleaner (125 applications)
57665	CleanStream Dispenser System w/Vortex Technology

Part No. 57850

CleanStream Dispenser System w/Vortex Technology, Part No. 57665

Procedure. Prepare the cleaning solution and clean the system daily by performing the following steps.

Note: The CleanStream Dispenser can hold a maximum of 2 liters of solution for cleaning up to 2 operatories. Mix solution quantity as necessary.

1. Fill the CleanStream dispenser with tap water as applicable;
   a. to the line marked 1 L for 1 operatory
   b. to the line marked 2 L for 2 operatories
2. Using the 20ml measuring line in the CleanStream Cleaner bottle cap, add the CleanStream Cleaner concentrate to the dispenser as applicable;
   a. for 1 operatory, add 20ml of CleanStream concentrate to the 1 liter of water
   b. for 2 operatories, add 40ml of CleanStream concentrate to the 2 liters of water
3. As shown by Figure 13, the interior of the CleanStream dispenser bottle cap is configured with three holes for the insertion of HVEs and SEs via provided adapters as follows.
   a. attach saliva ejector to smallest atomizing adapter
   b. attach 1 or 2 high volume ejectors to respective adapter(s)
4. Refer to Figure 13 and place dispenser in the 2-liter vertical position or the 1-liter horizontal position as necessary.
5. With the vacuum pump on and handpiece valves open, aspirate the CleanStream solution from dispenser.
6. After each cleansing procedure, disconnect the hand pieces and rinse the dispenser.

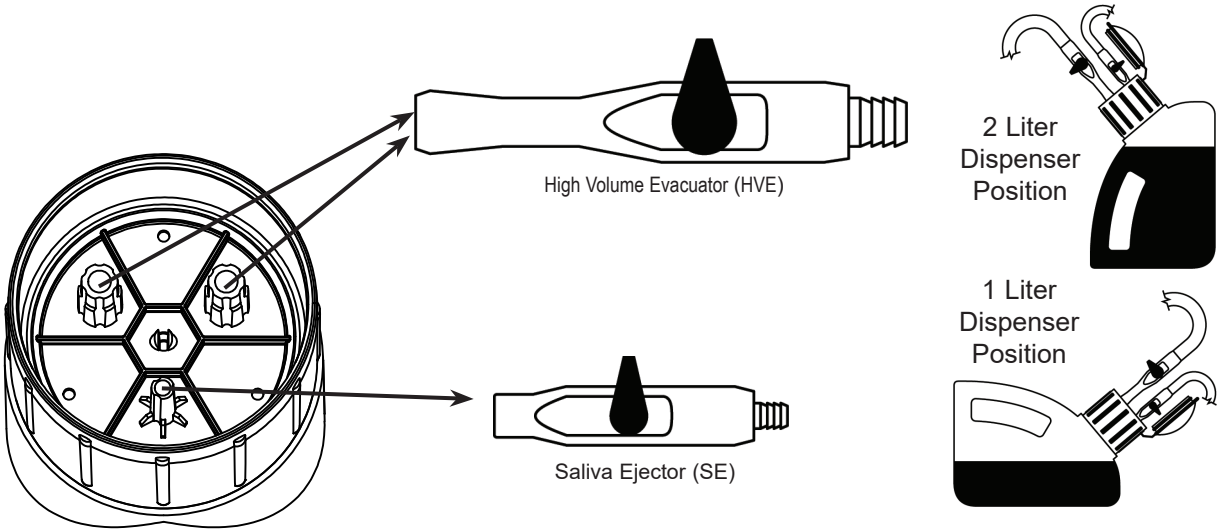

Figure 13. CleanStream Dispenser Cap Adaptor Locations

ACCESSORIES/OPTIONS

Accessories/Equipment Options. The following lists the ordering number and description for accessory components available to maintain the **MOJAVE** product family. Contact an authorized Air Techniques' dealer for information.

Description	Part Number
Remote Control Panels with 24V switches: 1-Switch Plate Kit 2-Switch Plate Kit 3-Switch Plate Kit 4-Switch Plate Kit	 53111 53251 53250 53133
Remote Water Control Valve Systems	53020, 53021 53170 & 53173
Replacement Bowl, Screen and Gasket for Inlet Filter	H5217
XL Utility Stack Rack	56600
Utility Stack Rack Mini	56650
Mojave 2Lt Installation Kit	H4332
Mojave 2Lt Interface Hardware	H4082

TROUBLESHOOTING

Automated Self Diagnostic Feature: Every 2 hours if the pump is OFF it will be turned ON for 6 seconds and then turned OFF. This feature makes sure that the pump remains ready for operation and may be helpful in preventing locked rotors.

Error Reporting: The Pump monitors the system operation and immediately records and reports any warnings or errors found. Some errors clear automatically as soon as the operating issues are resolved; other errors have to be manually reset. The table below lists the types of errors reported along with their possible causes, and possible resolution.

Message Type	Message Text	Possible Cause	Possible Solution
Warning	Line Voltage out of range. Contact Technician	a. Voltage dips or spikes on the AC Mains. b. Unit installed on a 120 VAC circuit	a. Make sure that the Pump is on a dedicated circuit. b. Make sure that the Pump is on a 220 VAC circuit.
	Room temperature is too high.	a. Ventilation in the equipment room is inadequate b. Exhaust lines are restricted	a. Check that the ambient temperature is not above 120°F. Increase the ventilation in the equipment room if necessary. b. Check that the exhaust lines are not blocked or restricted.
	Room temperature is too low.	a. Insulation of the equipment room is inadequate	a. Check that the ambient temperature in the equipment room is above 40°F. Increase heating to the equipment room if necessary.
	Vacuum level value is more than 1.0 inHg over setpoint.	a. Feedback control problem b. Control board malfunction	a. Check that the Control board is not in "By-pass" mode b. Contact your Technician or Technical Support
	Vacuum level value is less than 0.5 inHg.	a. Air Leak in vacuum lines b. Restricted exhaust c. Restricted inlet	a. Check for Air Leak in the vacuum lines, is the idle frequency high? b. Check for restricted exhaust lines c. Check for restricted inlet lines
	Control and auxiliary unit are disconnected. Please check the connection.	a. RJ45 cable between units is not connected b. Missing CANBUS termination resistor(s)	a. Verify RJ45 cable is inserted in the CANBUS port on both units b. Verify CANBUS termination resistors are installed in both units
	Pressure of control and auxiliary unit is different.	a. Improperly connected or missing tubing b. Blockage in tubing	a. Verify all tubing is installed and secure b. Clear any blockages in tubing
	Firmware of control and auxiliary unit is different.	a. Different firmware versions installed on Main and Aux unit	a. Upgrade both units to latest firmware revision
	Connection setting changed. System will reboot in 10s.	a. User modified role of unit	a. No action necessary, unit will reboot

TROUBLESHOOTING

Message Type	Message Text	Possible Cause	Possible Solution
Error	Pressure sensor malfunction. Contact Technician.	a. Defective component(s)	a. Contact your Technician or Technical Support
	Room temperature above 120°F. Confirm and unit will restart when room has cooled.	a. Ventilation in the equipment room is inadequate	a. Check that the ambient temperature is not above 120°F. Increase the ventilation in the equipment room if necessary
	Separator below minimum speed. Re-enable motor?	a. A large amount of liquid has entered the Separator b. Separator is not powered c. Hall effect sensor is not connected	a. A large amount of liquid has entered the Separator, try turning the Pump ON again. b. Check that the Separator fan is spinning when the pump is turned ON. c. Check that the hall effect sensor cable is not loose at the back of the unit.
	Motor VFD error detected. Contact Technician.	a. Various issues with the VFD can cause this problem	a. Check for the VFD error code under the 'Settings -> Info' screen and contact Technical Support
	Separator did not reach minimum RPM during Bump routine.	a. Large volume of liquids at inlet during bump routine b. Bad AWS sensor cable	a. Check plumbing for traps and other sources of water pooling while unit is off b. Replace AWS sensor cable
	Separator failed to reach operating speed during startup. Contact Technician if problem continues.	a. Large volume of liquids at inlet during bump routine b. Bad AWS sensor cable.	a. Check plumbing for traps and other sources of liquid pooling b. Replace AWS sensor cable
	Separator below critical operating speed. Confirm to resume system operation.	a. Large volume of liquids surging into AWS during operation	a) Check plumbing for traps and other sources of liquid pooling
	Separator reading was 0 RPM when entering run mode. Check Separator functionality. Contact Technician.	a. AWS Seized or blocked b. AWS power failure c. Bad AWS capacitor d. Bad AWS sensor cable	a. Check AWS for debris and clean if necessary b. Verify AWS power connections are proper and voltage is being supplied, replace AWS if needed c. Replace capacitor if needed d. Replace AWS sensor cable
	Motor did not reach proper vacuum level during Bump routine.	a. Vacuum leaks b. Seized vacuum pump	a. Tighten all connections and ensure proper plumbing b. Replace vacuum pump

WARRANTY

MOJAVE LT is warranted to be free from defects in material and workmanship from the date of installation for a period of 5 years (60 months).

All part and component returns and replacement equipment under warranty require a Return Materials Authorization (RMA). Warranty returns must be received within three months of the RMA issue date. Items returned without an RMA, or included with other products for which an RMA has been issued, may be returned to the customer at the discretion of Air Techniques, Inc.

Any item returned under warranty, will be repaired or replaced at our option at no charge provided that our inspection shall indicate it to have been defective. Air Techniques, Inc. is not liable for indirect or consequential damages or loss of any nature in connection with this equipment. Dealer labor, shipping and handling charges are not covered by this warranty.

Warranty credit will not be applied to product returns that exhibit damage due to shipping, misuse, careless handling or repairs by unauthorized personnel. Credit, or partial credit, will not be issued until products/parts have been received and assessed. Warranty is void if product is installed or serviced by anyone other than an authorized Air Techniques' dealer or service personnel.

This warranty is in lieu of all other warranties expressed or implied. No representative or person is authorized to assume for us any liability in connection with the sale of our equipment.

ON-LINE WARRANTY REGISTRATION

Quickly and easily register your new **MOJAVE** online. Just have your serial numbers available. Then go to the Air Techniques Portal, **www.airtechniques.com/portal,** create an online account and use your serial number to register your equipment. This on-line registration ensures a record for the warranty period and helps Air Techniques keep you informed of product updates and other valuable information.

For over 60 years, Air Techniques has been a leading innovator and manufacturer of dental products. Our priority is ensuring complete satisfaction by manufacturing reliable products and providing excellent customer and technical support. Whether the need is digital imaging, utility room equipment or merchandise, Air Techniques can provide the solution via our network of authorized professional dealers. Proudly designed, tested and manufactured in the U.S., our products are helping dental professionals take their practices to the next level.

Air Techniques' family of quality products for the dental professional include:

- ❑ **Digital Imaging**
  - Digital Radiography
  - Intraoral Camera
  - Caries Detection Aid
  - Intraoral X-ray
- ❑ **Utility Room**
  - Dry Vacuums
  - Wet Vacuums
  - Air Compressors
  - Amalgam Separator
  - Utility Accessories
  - Utility Packages
- ❑ **Nitrous Oxide**
  - Analog & Digital Flowmeters
  - Flowmeter mounting
  - Central Gas Supply: Manifold, Alarm, Zone Valve, Outlets, & accessories.
  - Oxygen Delivery & Emergency delivery
  - Scavenger systems & Nasal hoods
- ❑ **Merchandise**
  - Surface Disinfectant
  - Enzymatic Cleaner
  - Hand Sanitizer and Lotion
  - Waterline Cleaner
  - Evacuation System Cleaner
  - Imaging Accessories
  - Chemistry
  - Processor Accessories

www.airtechniques.com

Manufactured by: Air Techniques, Inc.
1295 Walt Whitman Road
Melville, New York 11747- 3062, USA
Phone: +1-800-247-832
Fax: +1-888-247-8481

AIR TECHNIQUES equipped for life®

Mojave is a registered trademark of Air Techniques, Inc.
© 2017 Air Techniques, Inc. • P/N H4300 Rev. P • August 2026