MOJAVE® MONITOR

Dry Vacuum System

Part Numbers V15M, 2V15M, 3V15M and 4V15M

PRE-INSTALLATION GUIDE

All pumps comply with NFPA 99C level 3 requirements.

All installations must conform to local codes.

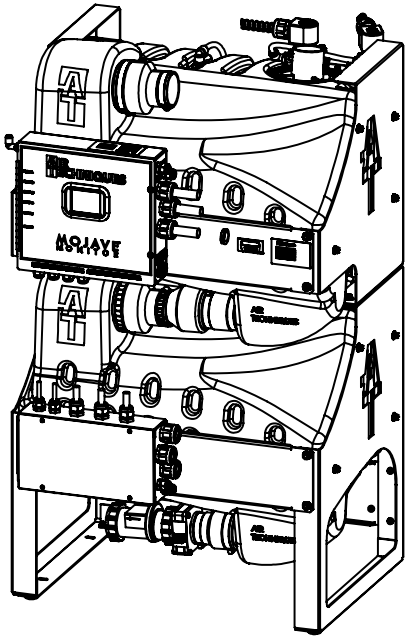

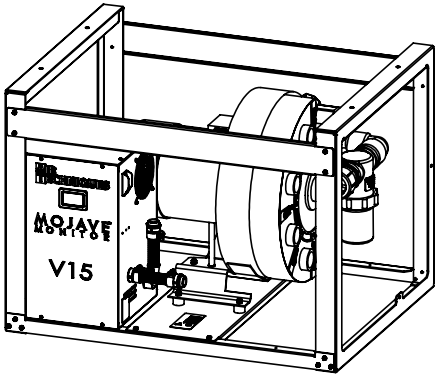

System being installed: (AS CHECKED)

- ❑ V15M
- ❑ 2V15M
- ❑ 3V15M
- ❑ 4V15M

Doctor: _____

Address: _____

Phone#: _____

Dealer: _____

Dealer Address: _____

AIR TECHNIQUES equipped for life®

System Components				
	V15M	2V15M	3V15M	4V15M
V15M Pump Assembly	1	2	3	4
CT12-M Tank Assembly	1	1	1	1
CT34-M Tank Assembly	0	0	1	1
Maximum Users	15	30	45	60

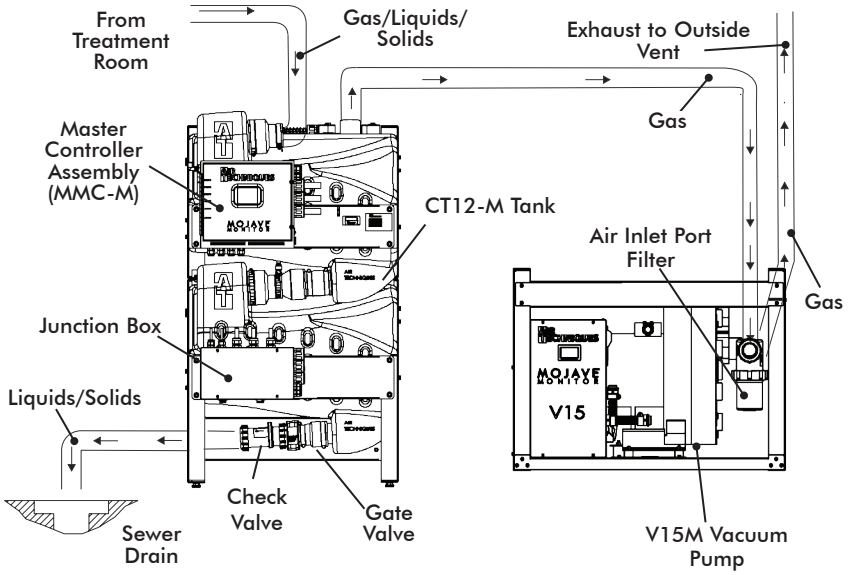

Typical V15M MOJAVE System Installation

Physical Characteristics			
	CT12-M & CT34-M Continuum Tank	One V15M Pump	Two V15M Pumps Stacked
Width	25 in. (64 cm)	32.5 in. (83 cm)	32.5 in. (83 cm)
Depth	23 in. (58 cm)	26 in. (66 cm)	26 in. (66 cm)
Height	42 in. (107 cm)	23.5 in. (60 cm)	47 in. (119 cm)
Weight	175 Lbs. (65 kg)	250 Lbs (93 kg)	500 Lbs (187 kg)

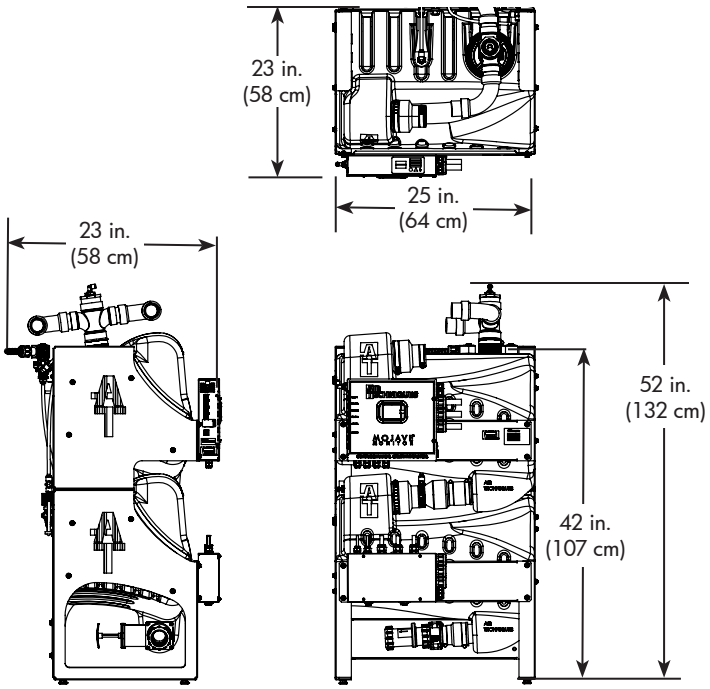

CT12-M and CT34-M Continuum Tank Dimensions

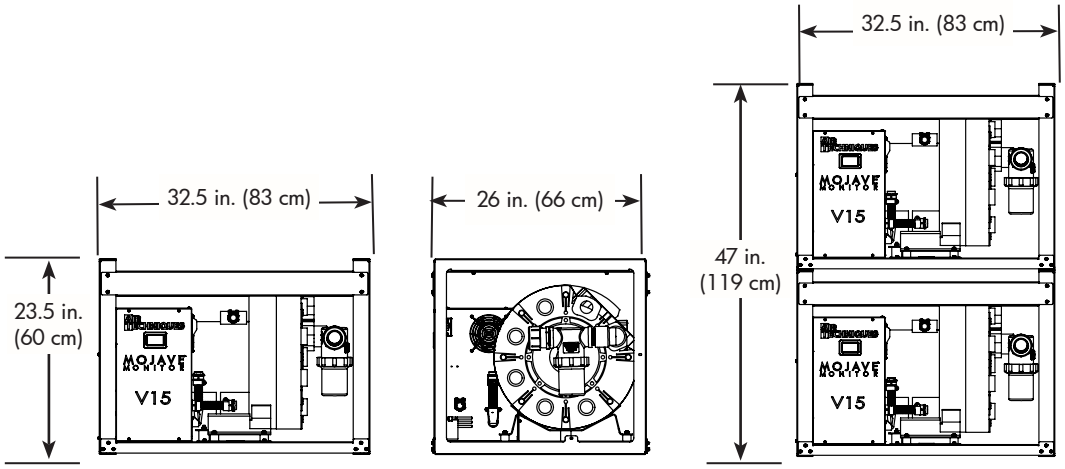

One Pump

Two Stacked Pumps

V15M Vacuum Pump Dimensions

MOJAVE SYSTEM CONFIGURATIONS

Important:

- ❑ Side by side installation of pump and tank is preferred.
- ❑ V15M pumps should only be stacked two high in all other system configurations as shown.
- ❑ All tanks are shipped with leveling feet set to lowest position.
- ❑ V15M pumps are shipped without leveling feet. They are supplied in pump accessary kit.

Note: Stacked V15M System is only configuration that allows a CT12-M Tank to be stacked above a V15M Pump. Use Drip Shield Kit, H5454

Minimum System Footprint

Side by Side V15M System Installation		
Width	Depth	Area
64 in. (162.5 cm)	30 in. (76.2 cm)	13.25 ft^2 (1.2 m^2)
Stacked V15M System Installation		
Width	Depth	Area
36 in. (91.5 cm)	30 in. (76.2 cm)	7.5 ft^2 (0.7 m^2)
2V15M System Installation		
Width	Depth	Area
64 in. (162.5 cm)	30 in. (76.2 cm)	13.25 ft^2 (1.2 m^2)

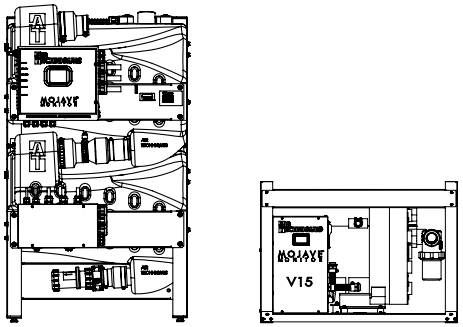

V15M System Installation: One V15M Pump and One CT12-M Tank Installed Side by Side

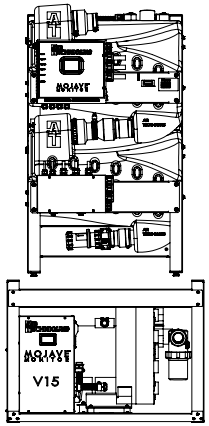

Stacked V15M System Installation: One CT12-M Tank above One V15M Pump (See note.)

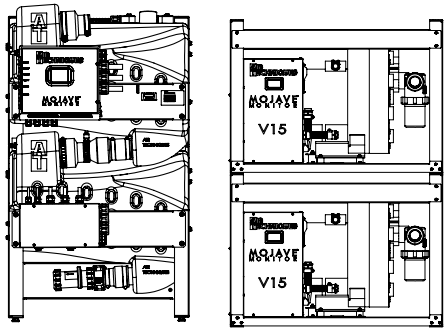

2V15M System Installation: Two V15M Pumps Stacked with One CT12-M Tank on the Side

Minimum System Footprint

3V15M System Installation		
Width	Depth	Area
130 in. (330.2 cm)	30 in. (76.2 cm)	27 ft^2 (2.5 m^2)

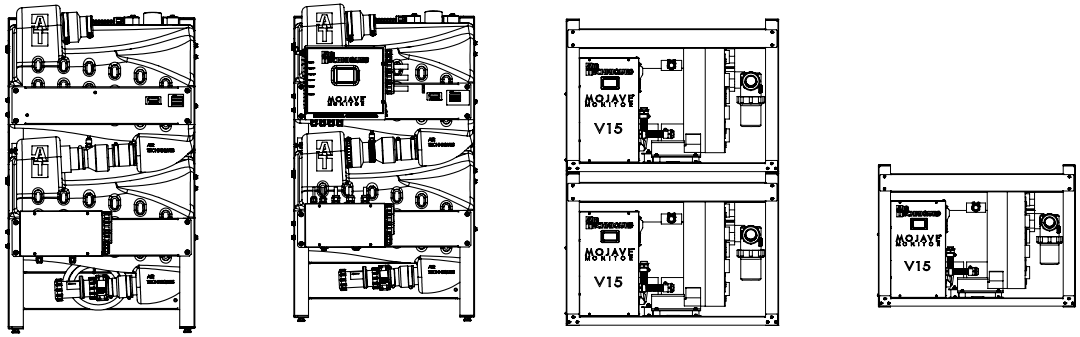

3V15M System Installation Three V15M Pumps (2 stacked) with CT12-M and CT34-M Tanks on the Side

Minimum System Footprint

4V15M System Installation		
Width	Depth	Area
130 in. (330.2 cm)	30 in. (76.2 cm)	27 ft^2 (2.5 m^2)

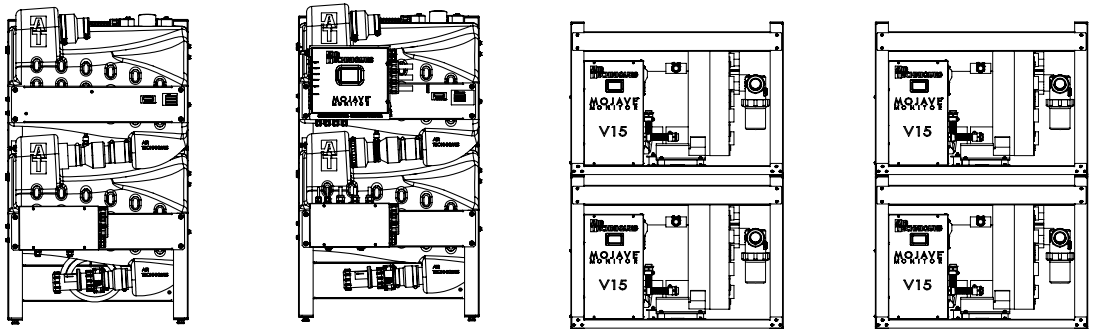

4V15M System Installation Two Side by Side Stacks of Two V15M Pumps with CT12-M and CT34-M Tanks on the Side

TREATMENT ROOM PLUMBING INSTALLATIONS

SUB FLOOR INSTALLATION -

Recommended system installation layout should be used whenever possible.

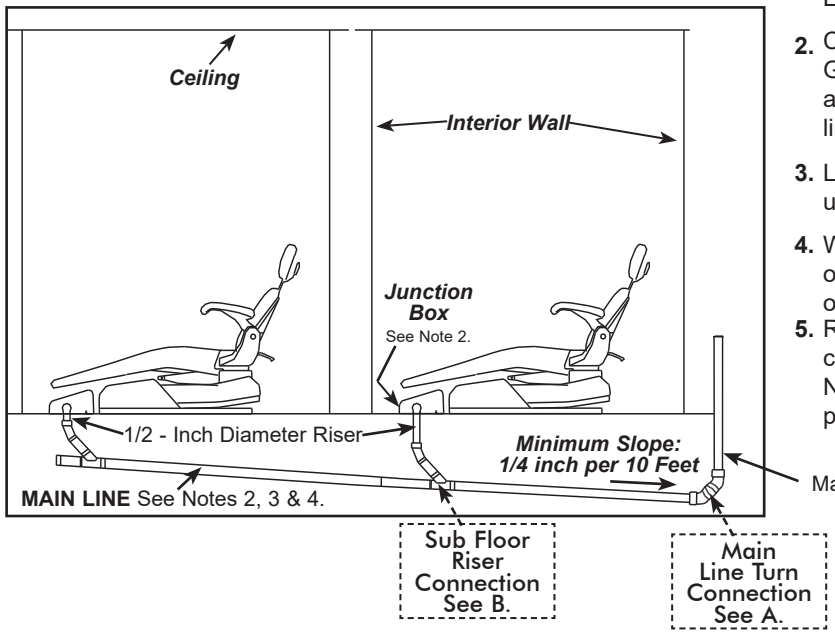

Notes:

1. 10-foot Maximum Height from Main Line to Tank.
2. Consult Dental Unit Manufacturer's Guidelines for correct reduced size and height of termination of vacuum line inside junction box.
3. Limit branches. Orient main line under junction box or cabinet.
4. When piping line is above 3/4" I.D. or larger, use 45° WYE's & elbows only.
5. Recommend installing separate line connection for scavenger when using Nitrous scavengers in overhead piping installations.

OVERHEAD INSTALLATION -

Alternate system installation layout should be used only when unable to use the sub-floor plumbing layout.

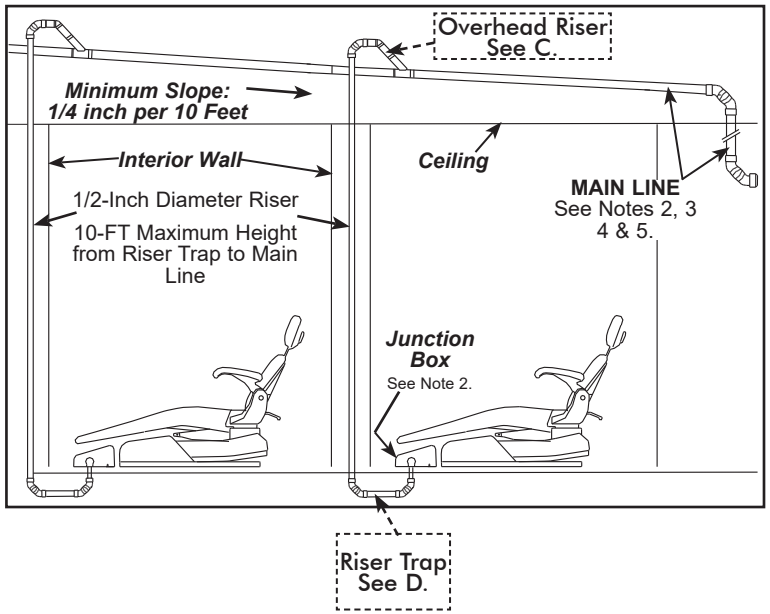

CONNECTOR DETAILS - ALL INSTALLATIONS

- ❑ Use only 45° elbows to make turns in main line.
- ❑ Make sure to use the proper pipe type for associated system.
- ❑ If piping is diverted to clear an obstruction, DO NOT MAKE A TRAP. See detail A, Main Line Turn Connections.
- ❑ DO NOT use standard 90° elbows.

Important:

All installation pipes and fittings provided by plumber.
All installations must conform to local codes.

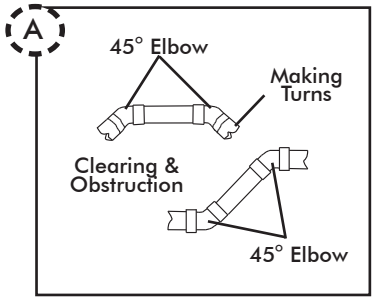

Main Line Turn Connections

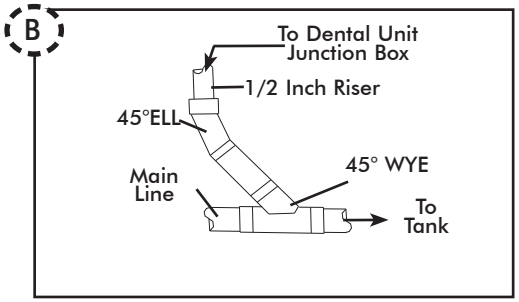

Sub Floor Riser to Main Line Detail

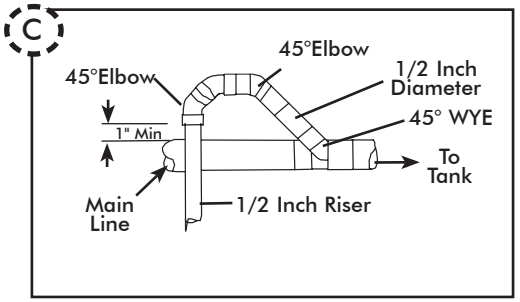

Overhead Riser to Main Line Detail
(Prevents liquids from draining down the 1/2" riser.)

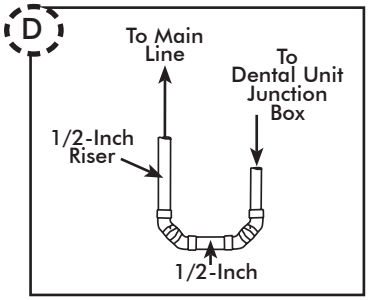

Riser Trap Detail (45° Elbows)

TYPICAL EQUIPMENT ROOM FLOOR PLAN LAYOUT

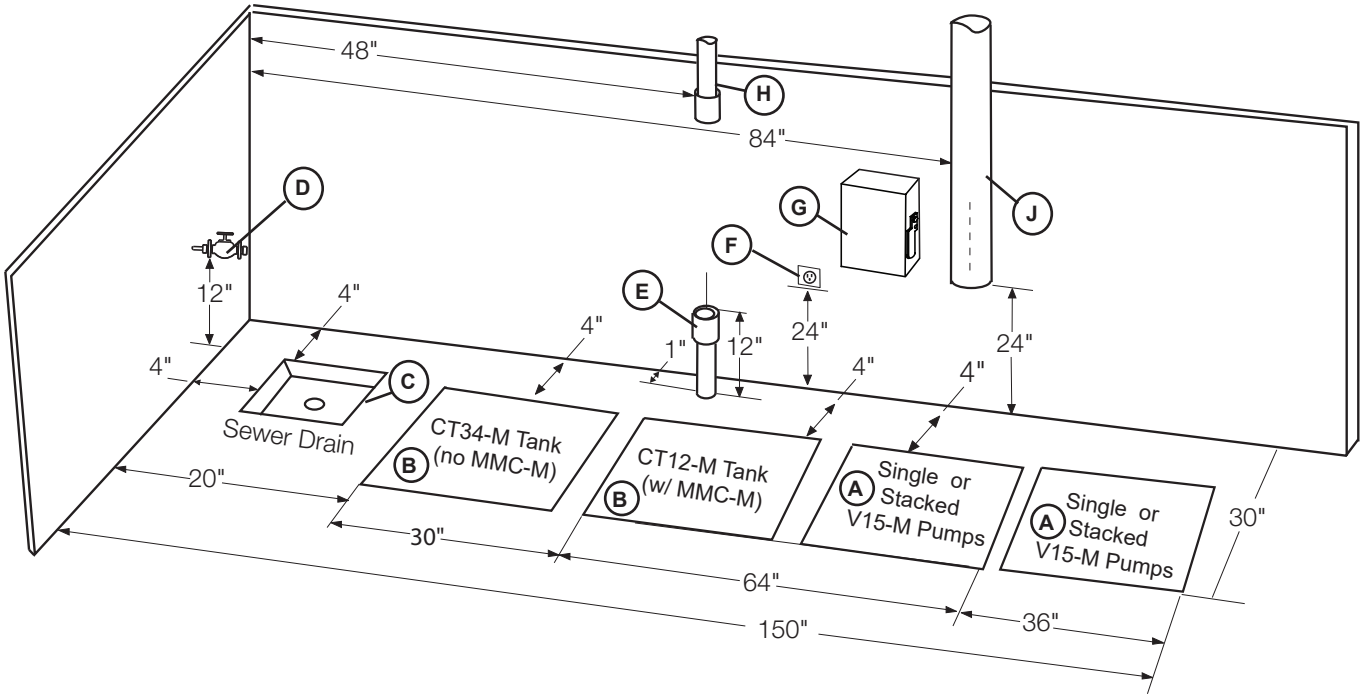

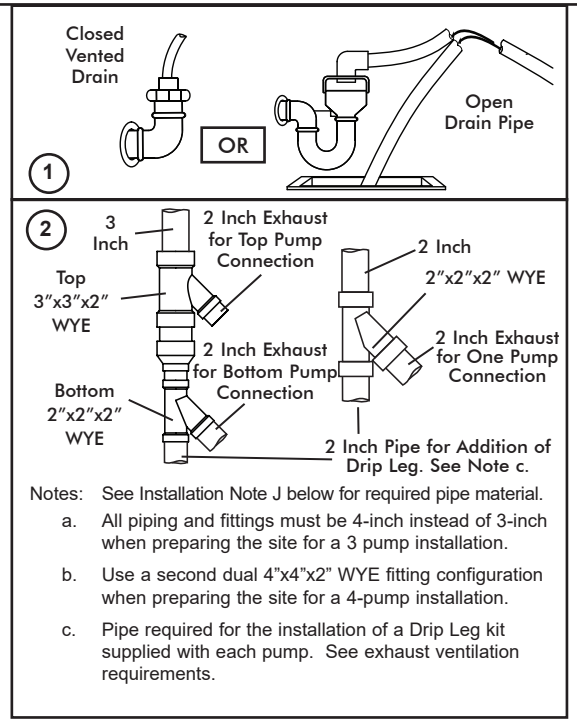

Notes: See Installation Note J below for required pipe material.

a. All piping and fittings must be 4-inch instead of 3-inch when preparing the site for a 3 pump installation.

b. Use a second dual 4"x4"x2" WYE fitting configuration when preparing the site for a 4-pump installation.

c. Pipe required for the installation of a Drip Leg kit supplied with each pump. See exhaust ventilation requirements.

INSTALLATION NOTES:

A. **PUMP INSTALLATION SPACE -** Area for single or stacked V15M pumps in typical side by side installations. Only stack up to 2 pumps in one area.

B. **TANK INSTALLATION SPACE -** Area for CT12-M or CT34-M tank in typical side by side installations.

C. **SEWER DRAIN -** Provide a drain for the removal of waste liquids from the MOJAVE tank. Use an open drain pipe (1 ½ inch P-Trap with 1 inch air gap or floor sink) or a closed vented drain.

D. **TANK WASHOUT -** Provide a water source terminated with a ½ inch FNPT shut-off valve providing water pressure between 20 and 100 psi for daily tank washout. Valve location must be no more than 10 feet from the tank installation to allow connection of supplied 10-foot 3/8-inch Poly tubing to the tank washout port. Provisions for backflow prevention may be required. Check local code requirements.

E. **SUB FLOOR INSTALLATION VACUUM LINE -** See Plumbing Requirements for connection to tank inlet via supplied hose.

F. **MASTER CONTROLLER ELECTRIC OUTLET -** Master Controller requires a dedicated stand alone single phase 220V, hospital grade grounded receptacle. The supplied 10-foot line cord is the Mains disconnect device for the unit.

G. **PUMP ELECTRIC SERVICE -** Each MOJAVE pump is wired directly with a dedicated 220V, 40 AMP, three phase 50/60 Hz circuit. If Main Circuit panel is not located in equipment room, a disconnect box with approved ground is needed for each pump. Disconnect boxes should be mounted no more than 3 feet of each other and 3 feet of installation center line.

H. **OVERHEAD INSTALLATION VACUUM LINE -** See Plumbing Requirements for connection to tank inlet via supplied hose.

J. **HEAT EXHAUST -** Refer to Exhaust Line Options and Exhaust Ventilation Requirements for the exhaust vent line required for specific **MOJAVE** configurations. Schedule 40 metal pipe can normally be used on typical **MOJAVE** configuration installations. When installing two or more pumps, a reducing WYE adapter is needed to connect each vent tube to a common 3-inch exhaust vent line.

Electrical	V15M	2V15M	3V15M	4V15M	Master Controller
Voltage Rating Volts AC	All pumps 220 Volts 3 Phase AC, 60 Hz, ± 10%				220 (Single Phase ± 10%)
Voltage Minimum/Maximum	198/242 Volts AC All pumps				205/240
Wire Size AWG Minimum Gauge	#8 AWG	#8 AWG	#8 AWG	#8 AWG	#14 AWG
Minimum Circuit Breaker Rating	40A	40A (Qty 2)	40A (Qty 3)	40A (Qty 4)	15A
Incoming Power	Hard wire Connection (Each pump is supplied a 6 foot BX cable)				NEMA 6-15R (Supplied 10-ft. line cord)
Remote (Low Voltage Wiring)	#18 AWG (Qty 4) Wire Connection between the MMC-M and the Remote Switch Panel . (See Figure 16, page 26.)				

Plumbing	V15M	2V15M	3V15M	4V15M
Exhaust Vent Pipe (See note 1)	2” Metal Pipe	One 3” or two 2” Metal Pipe	One 4” or three 2” Metal Pipe	Two 3” or four 2” Metal Pipe
Minimum Suction Line Pipe	2” PVC Sch. 40	3” PVC Sch. 40	3” PVC Sch. 40	4” PVC Sch. 40
Maximum Suction Line Pipe (See note 2)	3” PVC Sch. 40	4” PVC Sch. 40	4” PVC Sch. 40	6” PVC Sch. 40
Minimum Riser Pipe	½” PVC Sch. 40	½” PVC Sch. 40	½” PVC Sch. 40	½” PVC Sch. 40
Vacuum Line Termination	3”	3”	3”	3”
Branch Line Pipe	Size requirement of Branch piping differs by the number of operatories being serviced. Up to two operatories use 1" PVC Schedule 40. Three to six operatories use 1 ½” PVC Schedule 40. More that six operatories use 2" PVC Schedule 40			
Drain Line Pipe	1 ½” PVC Schedule 40			
Wash-Out Water Line	½” FNPT Shut-off Valve			

NOTES

1. Recommended for all new installations.
2. Use maximum internal diameter for the main line when preparing any new installation.

HEAT EXHAUST CONNECTION NOTES

1. **VENT LINE -** Refer to Exhaust Line Options and use metal pipe (supplied by installer) to fabricate the required exhaust vent line for MOJAVE systems. Do not make a trap in the exhaust vent piping.

   Also see Exhaust Vent Protection and Ventilation Requirements below.

2. **V15M PUMP EXHAUST VENT CONNECTION -** Connection between the pump and exhaust vent piping is typically made via the supplied 2-inch Black Flex tubing.

3. **DRIP LEG -** The supplied drip leg must be installed at the lower end of the vent pipe to collect condensation produced during pump operation. The bottom of drip leg should be located a minimum of 4 inches from floor. Attach the drain tube to the drip leg quick-connect fitting to allow drainage into floor drain/sink.

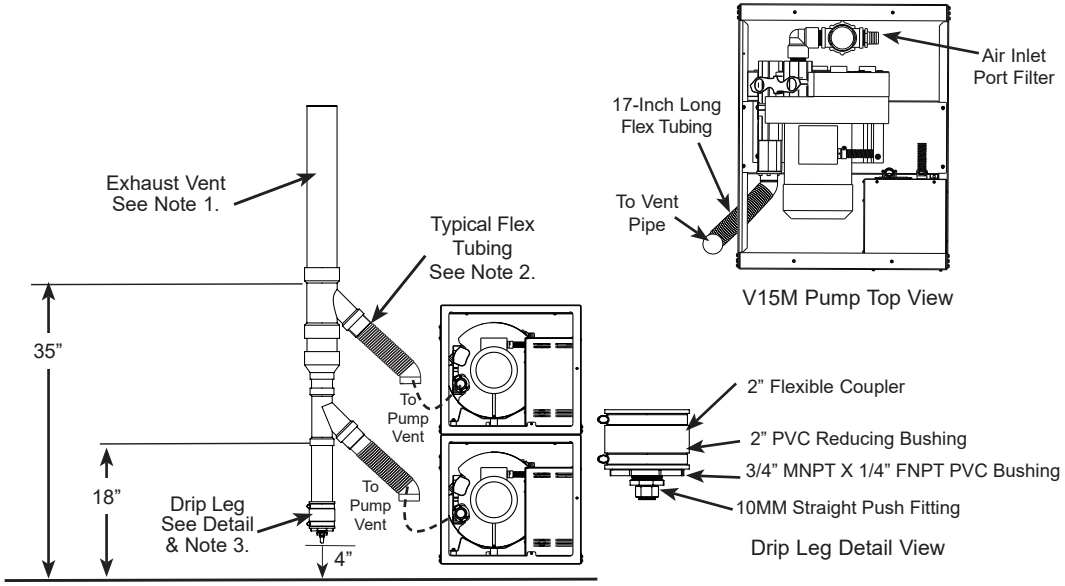

V15M Pump Heat Exhaust Connection

Exhaust Vent Protection.
If the exhaust piping is venting to the outside of the building, precautions must be taken to protect the equipment room from weather elements and animal intrusion. This can be accomplished by using one of the three methods shown on the right.

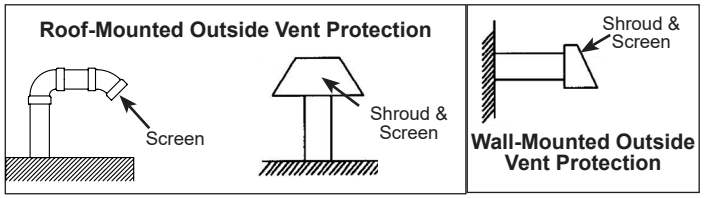

Exhaust Vent Requirements.
The MOJAVE equipment must be used in a controlled-temperature environment. Maintain equipment room temperature between 40 and 105 degrees Fahrenheit. An exhaust fan is necessary if room temperature is not maintained by other methods.

Adequate forced ventilation must be provided across the unit by placing an appropriate exhaust fan opposite an equivalent air intake vent . The fan should be placed higher than the associated intake vent. Recommended minimum exhaust fan requirements for each MOJAVE unit are listed to the right.

Mojave Unit	Min (Watts)	Max (Watts)	Min (BTU/hr)	Max (BTU/hr)
V15M	1,219	5,892	4,159	20,097
2V15M	2,438	11,784	8,319	40,195
3V15M	3,657	17,676	12,478	60,292
4V15M	4,876	23,568	16,638	80,390

2" EXHAUST LINE

ONLY USE ONE
2" WYE PER LINE*

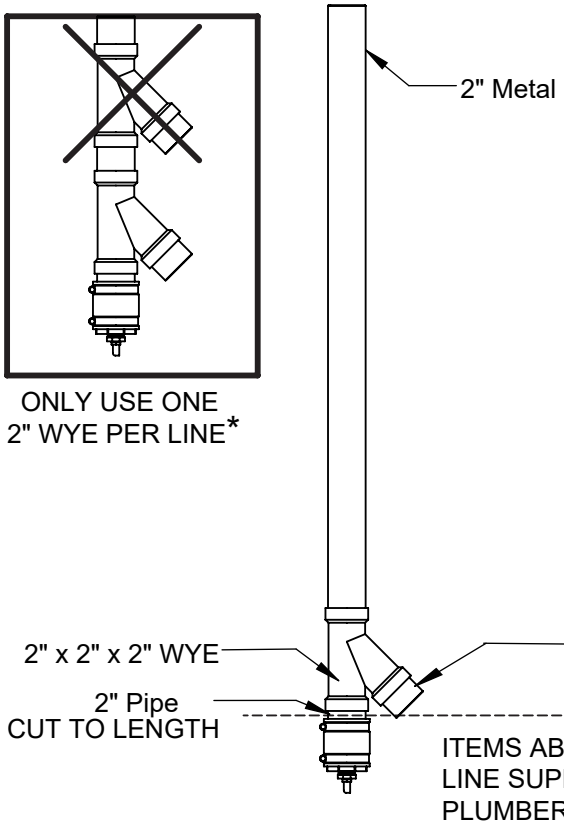

3" EXHAUST LINE

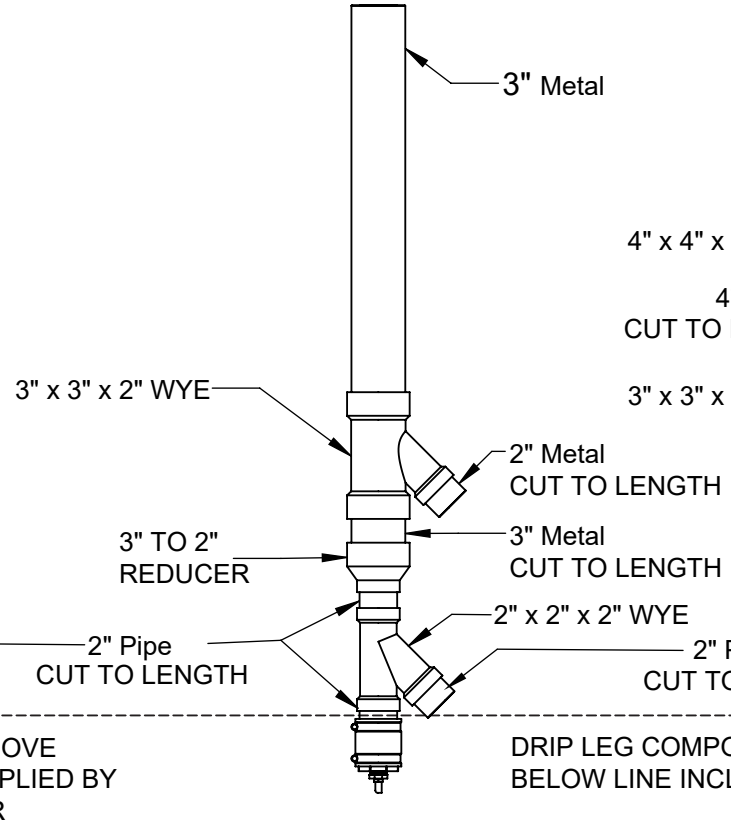

4" EXHAUST LINE

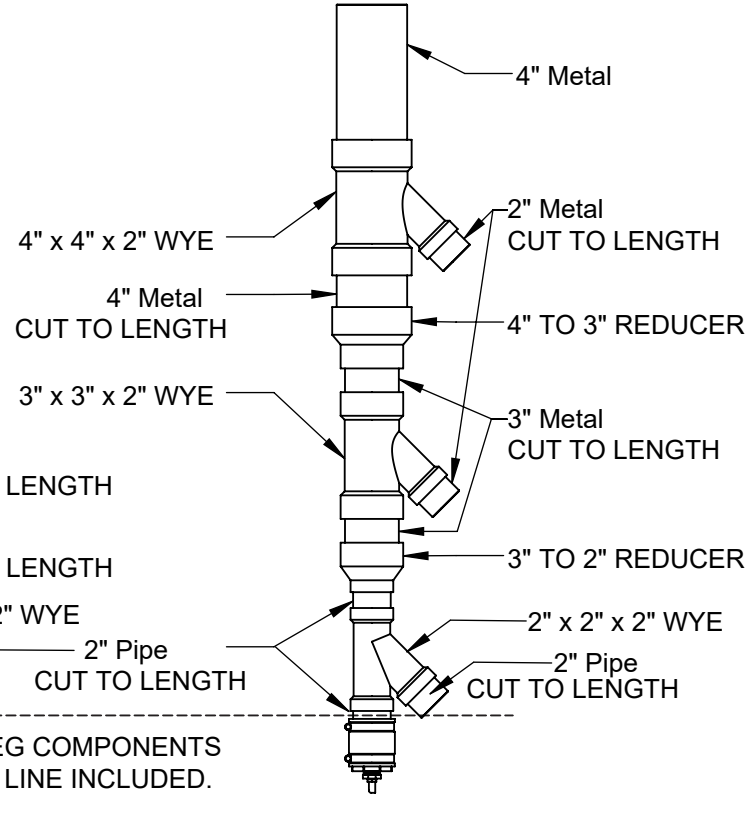

DRIP LEG ASSEMBLY PROVIDED (1 PER PUMP)

2" EXHAUST LINE	
MODEL#	**QTY**
V3, V5, V5	1x
2V3, 2V5, 2V7	2x
3V5	3x
4V5	4x

3" EXHAUST LINE	
MODEL#	**QTY**
2V3, 2V5, 2V7	1x
4V5	2x

4" EXHAUST LINE	
MODEL#	**QTY**
3V5	1x

***NOTE:** Do not use mutliple 2" WYE assemblies together with a singe 2" exhaust line for multi-pump systems. Make sure to take into account pump locations before assembling manifold.

NOTES

NOTES

NOTES

For over 50 years, Air Techniques has been a leading innovator and manufacturer of dental products. Our priority is ensuring complete satisfaction by manufacturing reliable products and providing excellent customer and technical support. Whether the need is digital imaging, utility room equipment or merchandise, Air Techniques can provide the solution via our network of authorized professional dealers. Proudly designed, tested and manufactured in the U.S., our products are helping dental professionals take their practices to the next level.

Air Techniques' family of quality products for the dental professional include:

- ❑ **Digital Imaging**
  - Digital Radiography
  - Intraoral Camera
  - Caries Detection Aid
  - Intraoral X-ray
  - Film Processors
- ❑ **Utility Room**
  - Dry Vacuums
  - Wet Vacuums
  - Air Compressors
  - Amalgam Separator
  - Utility Accessories
  - Utility Packages
- ❑ **Merchandise**
  - Surface Disinfectant
  - Enzymatic Cleaner
  - Hand Sanitizer and Lotion
  - Waterline Cleaner
  - Evacuation System Cleaner
  - Imaging Accessories
  - Chemistry
  - Processor Accessories

www.airtechniques.com

Manufactured by: Air Techniques, Inc.
1295 Walt Whitman Road | Melville, New York 11747- 3062, USA
Phone: +1-800-247-8324 | Fax: +1-888-247-8481

AIR TECHNIQUES equipped for life®

MOJAVE is a trademark of Air Techniques, Inc.
© 2022 Air Techniques, Inc. • P/N H5544, Rev. B • June 2023